THE CONTENTS OF THIS DRAWING ARE THE EXCLUSIVE PROPERTY OF THE TECHNICAL MATERIEL CORP. ITS UNAUTHORIZED USE OR REPRODUCTION IN WHOLE OR IN PART IS STRICTLY FORBIDDEN.

REQ. PER UNIT	USED ON MODEL	ASS'Y. NO.	DATE
1	AFC-2		11-2-61
1	HNF-1		3-16-62
1	AFC-2A		4-12-62
1	AFC-3		4-12-62

MS-2735 A

HOLES:
A- 5/16 DIA. 1 REQ.
B- 1/8 DIA. 3 REQ.

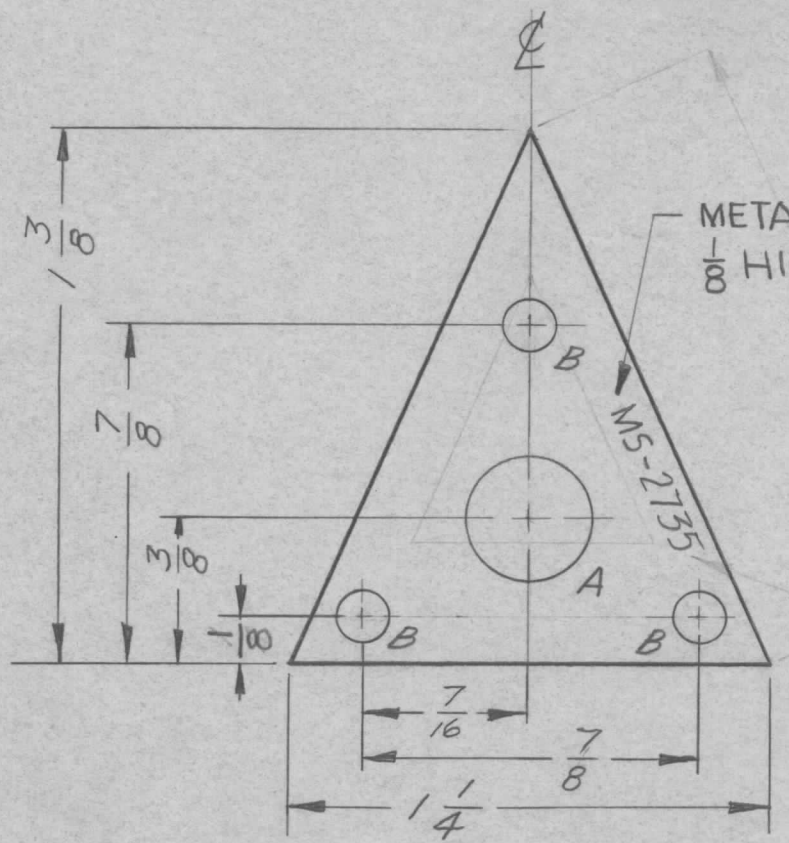

METAL STAMP TMC PART NO.
1/8 HIGH GOTHIC AS SHOWN

FINISH NOTE:
S404-YELLOW IRIDITE
S114-ZINC CHROMATE
#37875 LUSTERLESS WHITE
ENAMEL, PER. FED. STD# 595

UNLESS OTHERWISE SPECIFIED
DIMENSIONS ARE IN INCHES AND INCLUDE CHEMICALLY APPLIED OR PLATED FINISHES

DECIMALS	TOLERANCES	FRACTIONS
.X ± .05		± 1/64
.XX ± .01		ANGLES
.XXX ± .005		± 0° 30′

CUT HERE GUARANTEED 2-66

SYM	DESCRIPTION	DATE	CH. NO.	DRAFTS	CHECKER	ENG. APP.
A	FINISH WAS S-404 YELLOW IRIDITE & WHITE PAINT	6-20-62	6808	R.J.	[signature]	[signature]

UNLESS OTHERWISE SPECIFIED:
DIMENSIONS ARE IN INCHES
TOLERANCES ON
FRAC. ± 1/64 DEC. ± .005 ANGLES ± 1/2°

SCALE: DO NOT SCALE

MAXIMUM ALLOWABLE TOLERANCES HAVE BEEN DETERMINED AND ANY DEVIATIONS WILL BE CAUSE FOR REJECTION. REMOVE ALL BURRS AND SHARP EDGES

REQ.	ITEM	PART NO.	DESCRIPTION	SYMBOL
		.051	THE TECHNICAL MATERIEL CORP. MAMARONECK, NEW YORK	
		STOCK SIZE		
		ALUMINUM	INDICATOR, TUNING	
		MATERIAL		

TYPE & TEMPER	HEAT TREAT. SPEC.	DRAWN	CHECKED	FINAL APPROVAL
5052-H32		wh	RUZZO	[signature]

FINISH & SPEC. NO.	ELEC. DES. APP.	MECH. DES. APP.	
SEE FINISH NOTE	[signature]		MS-2735 A

TMC FORM NO. 102-A