MS-2535 A

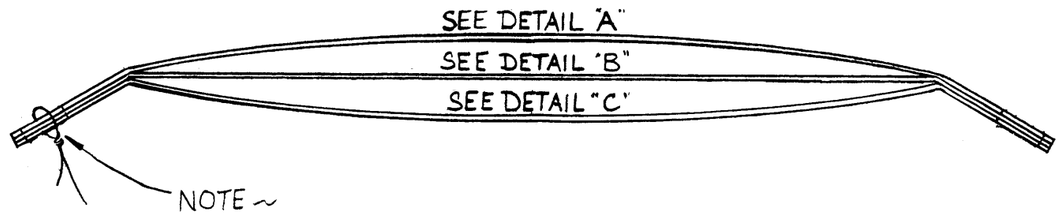

Each set made must be wired together for stocking purposes to maintain a matched set.

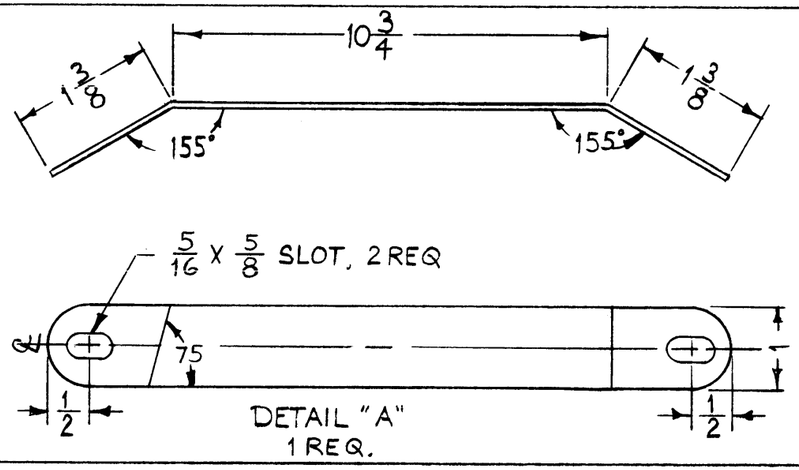

DETAIL "A"
1 REQ.

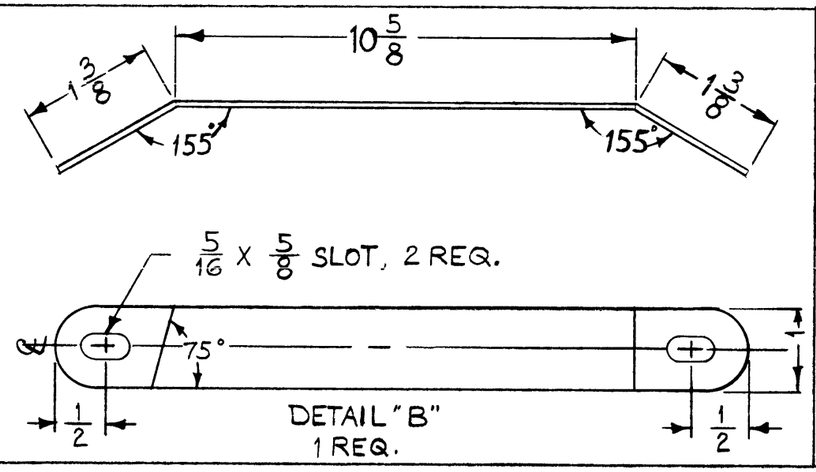

DETAIL "B"
1 REQ.

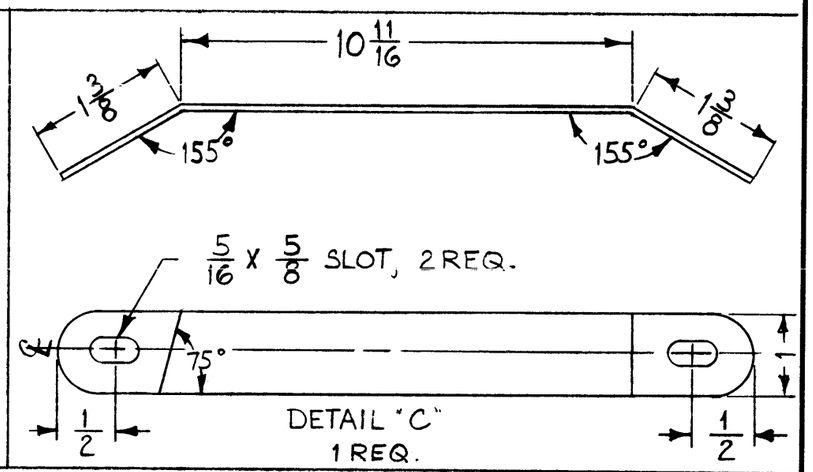

DETAIL "C"
1 REQ.

NOTICE TO PERSONS RECEIVING THIS DRAWING

THE TECHNICAL MATERIEL CORPORATION claims proprietary right in the material disclosed hereon. This drawing is issued in confidence for engineering information only and may not be reproduced or used to manufacture anything shown hereon without permission from THE TECHNICAL MATERIEL CORPORATION to the user. This drawing is loaned for mutual assistance and is subject to recall at any time.

Property of:
THE TECHNICAL MATERIEL CORPORATION
MAMARONECK, NEW YORK

SYM	DESCRIPTION	DATE	CH. NO.	DRAFTS	CHECKER	ENG. APP.
A	WIRING NOTE ADDED ITEMS 1 & 2 DELETED	4/26/61	4732	DM	JCB	[illegible]

UNLESS OTHERWISE SPECIFIED:
DIMENSIONS ARE IN INCHES
TOLERANCES ON
FRACTIONS ± 1/64 DECIMALS ± .005 ANGLES ± 1/2°

SCALE: DO NOT SCALE

MAXIMUM ALLOWABLE TOLERANCES HAVE BEEN DETERMINED AND ANY DEVIATIONS WILL BE CAUSE FOR REJECTION. REMOVE ALL BURRS AND SHARP EDGES

REQ. PER UNIT	MODEL	SECTION	ASS'Y. NO.	DATE
1	GPT-40K			3-6-61

USED ON

REQ.	ITEM	PART NO.	DESCRIPTION	SYMBOL
.031			THE TECHNICAL MATERIEL CORP. MAMARONECK, NEW YORK	
STOCK SIZE				
COPPER			STRAP, 40K R.F. INPUT	
MATERIAL				
SOFT			W.A.F.	[illegible]
TYPE & TEMPER	HEAT TREAT. SPEC.		DRAWN	CHECKER
SILVER PLATED .00025			LB	
FINISH & SPEC. NO.			ELEC. DES. APP.	MECH. DES. APP.

FINAL APPROVAL

MS-2535 A

TMC FORM NO. 109

DEFIANCE NO. 1020 36352