UNLESS OTHERWISE SPECIFIED
DIMENSIONS ARE IN INCHES AND INCLUDE
CHEMICALLY APPLIED OR PLATED FINISHES

DECIMALS
.X ± .05
.XX ± .01
.XXX ± .005

TOLERANCES

FRACTIONS
± 1/64
ANGLES
± 0° 30′

CUT HERE
GUARANTEED
2-66

| REQ. PER UNIT | USED ON MODEL | ASS'Y. NO. | DATE | MS-2507 | A |
|---|---|---|---|---|---|
| 2 | RFD-1 | | 1-12-61 | | |

HOLES —
A – $\frac{13}{64}$ DIA. 4 Req'd.
B – $\frac{5}{16}$ DIA. 1 Req'd.

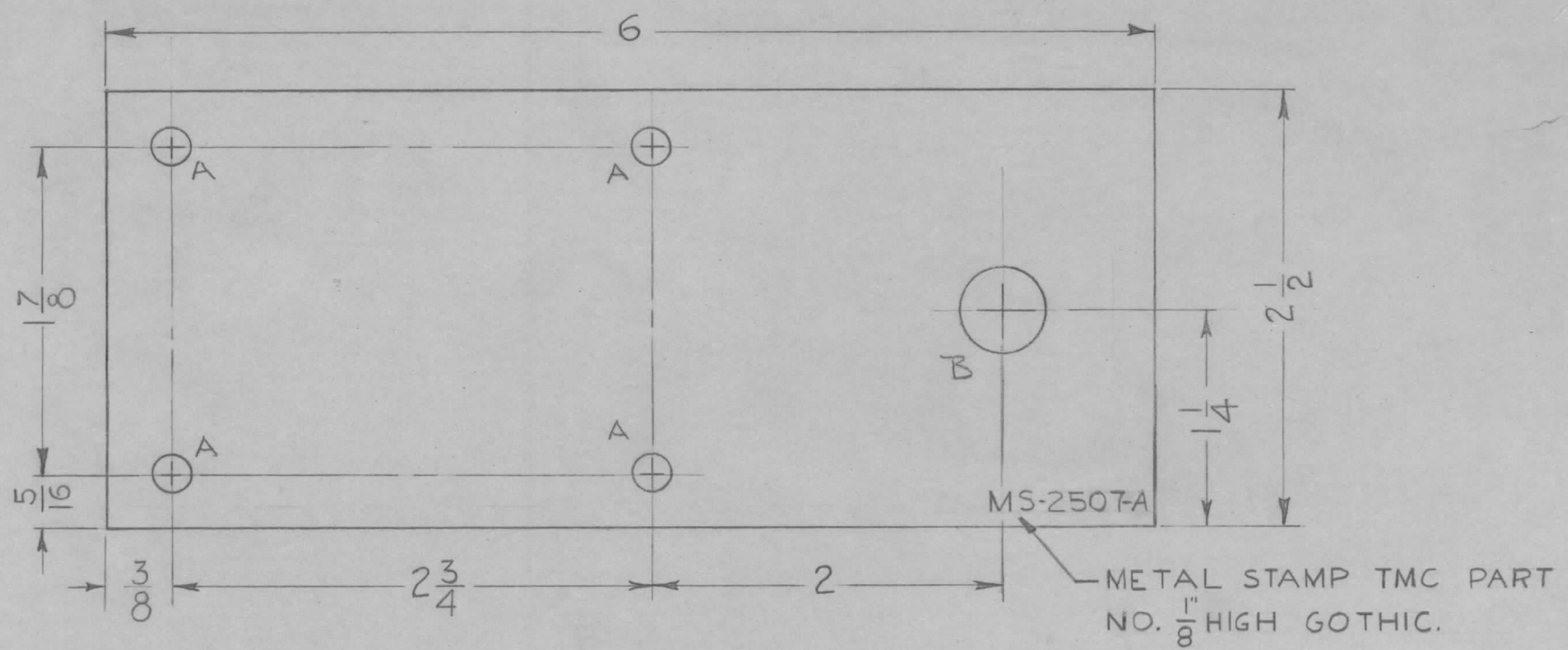


| ISSUE | ITEM | CHANGED FROM | DATE | CH. NO. | DRAFTS | CHECKER | ENG. APP. |
|---|---|---|---|---|---|---|---|
| A | 1 | "B" HOLE WAS 1/2 Dia. | 10/31/61 | 5784 | LL | RU | RK |

TOLERANCES

DEC. DIM. ±
FRAC. DIM. ±
ANGULAR DIM. ±

SCALE:

MAXIMUM ALLOWABLE TOLERANCES HAVE BEEN DETERMINED AND ANY DEVIATIONS WILL BE CAUSE FOR REJECTION. REMOVE ALL BURRS AND SHARP EDGES

| REQ. | ITEM | PART NO. | DESCRIPTION | SYMBOL |
|---|---|---|---|---|
| | | .020 | THE TECHNICAL MATERIEL CORP. MAMARONECK, NEW YORK | |
| | | STOCK SIZE | SHIM, DETENT, SLIDE | |
| | | ALUMINUM | | |
| | | MATERIAL | | |
| | | 5032-H32 | J. DeL | |
| | | TYPE & TEMPER / HEAT TREAT. SPEC. | DRAWN / CHECKED | FINAL APPROVAL |
| | | S404 IRIDITE | | MS-2507 A |
| | | FINISH & SPEC. NO. | ELEC. DES. APP / MECH. DES. APP | |

FORM 108-A