IF IT IS FOUND DESIRABLE TO CHANGE ANY TOLERANCE OR OTHER DETAIL SPECIFIED ON THIS DRAWING NOTIFY THE PURCHASER PROMPTLY.

MAXIMUM ALLOWABLE TOLERANCES HAVE BEEN DETERMINED AND DEVIATIONS WILL BE CAUSE FOR REJECTION. REMOVE ALL BURRS AND SHARP EDGES

NOTICE TO PERSONS RECEIVING THIS DRAWING

THE TECHNICAL MATERIEL CORPORATION claims proprietary right in the material disclosed hereon. This drawing is issued in confidence for engineering information only and may not be reproduced or used to manufacture anything shown hereon without permission from THE TECHNICAL MATERIEL CORPORATION to the user. This drawing is loaned for mutual assistance and is subject to recall at any time.

Property of:
THE TECHNICAL MATERIEL CORPORATION
MAMARONECK, NEW YORK

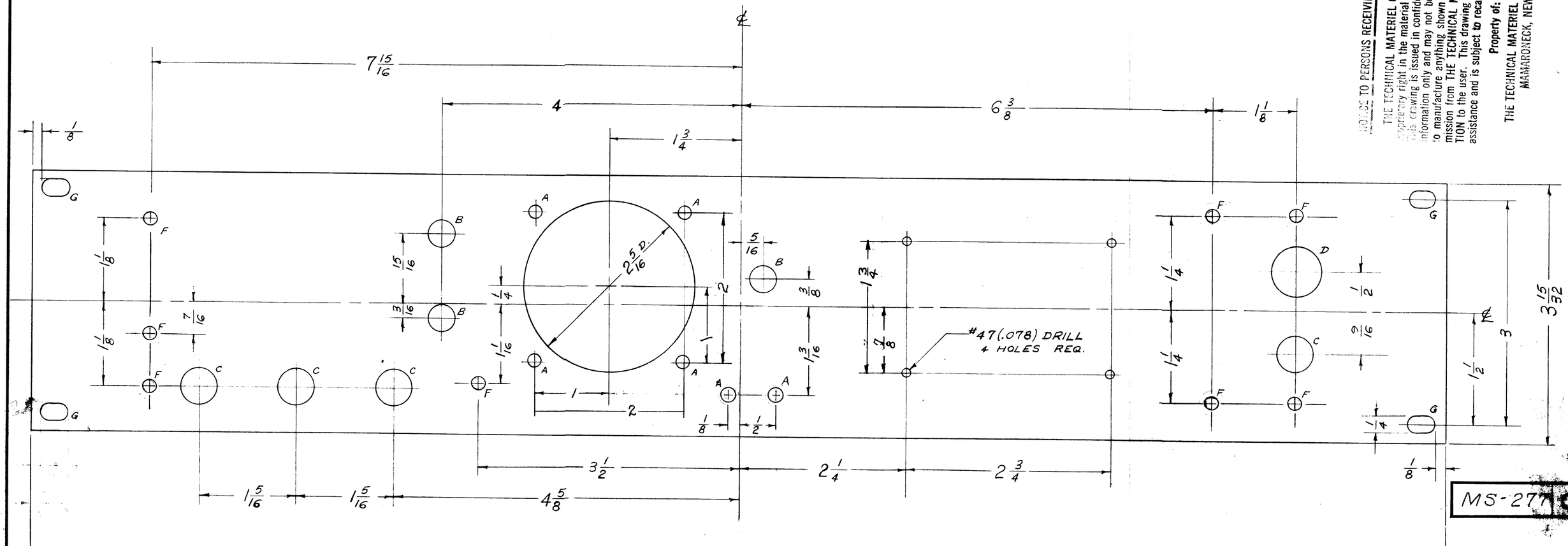

FRONT VIEW SHOWN

A- 3/16 (.187) D. 6 HOLES REQ.
B- 3/8 (.375) D. 3 " "
C- 1/2 (.500) D. 4 " "
D- 11/16 (.687) D. 1 " "

F- 11/64 DIA. 8 REQ.

G 1/4 X 13/32 SLOT 4 REQ.

NOTE:
S-404 - YEL - IRIDITE
S-114 - ZINC CHROMATE PRIMER
S-115 - SMOOTH GRAY ENAMEL
PAINT ONLY FRONT & EDGES OF PANEL

REF: LD-143

ISSUE	ITEM	CHANGED FROM	DATE	CN. NO.	DRAFTS	CHECKER	ENG. APP.
G	3	"E" HOLES DELETED	12/23/59	1700	AB	[illegible]	[illegible]
	2	"A" HOLES WERE 4 REQD					
	1	"F" WAS DRILLED CSNK FOR A-32					
F	1	S404 IRIDITE WAS S101 CAUSTIC DIP	12-9-59	1001	[illegible]		EMN
	—	REDRAWN NO CHANGE	8-11-55	—	PB	[illegible]	[illegible]

TOLERANCES

ALL OTHERS: DEC. DIM. ± ; FRAC. DIM. ± 1/64 ; ANGULAR DIM. ±

SCALE: DRILL, PUNCH, COMMERCIAL STOCK SIZES AND MANUFACTURERS TOLERANCES ARE NOT INCLUDED.

REQ. PER UNIT	MODEL	PROJECT NO.	ASS'Y. NO.	DATE
1	CFA			8-11-55

USED ON

REQ.	ITEM	PART NO.	DESCRIPTION	SYMBOL
3/16 THK.			THE TECHNICAL MATERIEL CORP. MAMARONECK. NEW YORK	
STOCK SIZE				
ALUMINUM	—		FRONT PANEL LAYOUT	
MATERIAL	WEIGHT PER PC.		MODEL CFA	
24S T4				
TYPE & TEMPER			PB 8-11-55	
—			DRAWN	ELEC. DES. APP. / MECH. DES. APP.
HEAT TREAT. SPEC.			[illegible]	[illegible]
SEE NOTE			CHECKED	FINAL APPROVAL
FINISH & SPEC. NO.			MS-277	G

FORM — 110