IF IT IS FOUND DESIRABLE TO CHANGE ANY TOLERANCE OR OTHER DETAIL SPECIFIED ON THIS DRAWING NOTIFY THE PURCHASER PROMPTLY.

MAXIMUM ALLOWABLE TOLERANCES HAVE BEEN DETERMINED AND DEVIATIONS WILL BE CAUSE FOR REJECTION. REMOVE ALL BURRS AND SHARP EDGES

NOTICE TO PERSONS RECEIVING THIS DRAWING

THE TECHNICAL MATERIEL CORPORATION claims proprietary right in the material disclosed hereon. This drawing is issued in confidence [illegible] information only and may not be [illegible] to manufacture anything shown hereon without permission from THE TECHNICAL MATERIEL CORPORATION to the user. This drawing is loaned for mutual assistance and is subject to recall at any time.

Property of:
THE TECHNICAL MATERIEL CORPORATION
MAMARONECK, NEW YORK

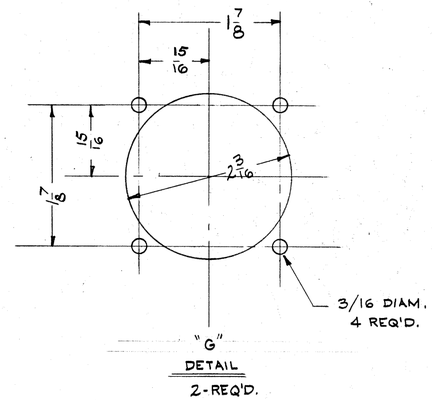


FRONT VIEW

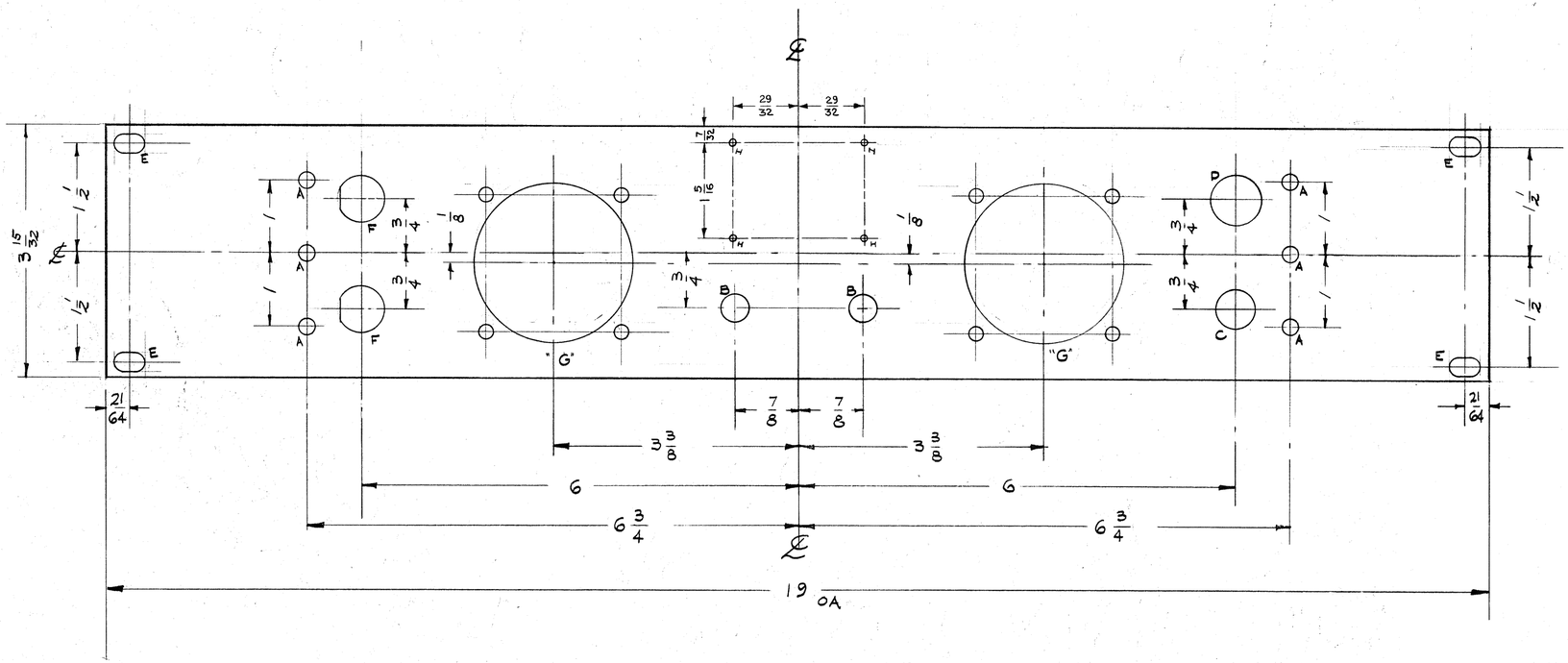


| HOLES | REQ'D. |
|---|---|
| A - 7/32 (.218) DIAM. | 6 |
| B - 3/8 (.375) " | 2 |
| C - 17/32 (.531) " | 1 |
| D - 11/16 (.687) " | 1 |
| E - 1/4 x 13/32 SLOT | 4 |

F - 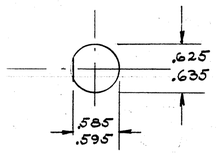

2 Req.

H - 5/64 (.078) DIA — — — — — — 4 REQ'D

MS-1903 A

MACHINING
1.- LATERAL BOW OF PANEL MUST BE KEPT TO .031 TOLERANCE.
2-MILL ALL EDGES
3-HOLES MUST BE DRILLED
4-PANEL MUST BE FREE OF ALL MACHINING MARKS, GOUGES, & SCRATCHES.

FINISH NOTE:
S404 YELLOW IRIDITE
S114 ZINC CHROMATE PRIMER } FRONT & EDGES ONLY
S115 SMOOTH GREY ENAMEL

8-LD - 634 - LET- REAR
REF: 8-LD - 635 - ENG- FRONT PANEL

| REQ. | ITEM | PART NO. | DESCRIPTION | SYMBOL |
|---|---|---|---|---|
| 3/16 | | | THE TECHNICAL MATERIEL CORP. MAMARONECK. NEW YORK | |
| STOCK SIZE | | | | |
| ALUMINUM | | | PANEL, FRONT | |
| MATERIAL | WEIGHT PER PC. | | SIDEBAND LEVEL MONITOR | |
| 2024 - T3 | | | | |
| TYPE & TEMPER | | | DRAWN: TOBILLO 10-20-59 | ELEC. DES. APP.: | MECH. DES. APP.: T.A. |
| HEAT TREAT. SPEC. | | | CHECKED | FINAL APPROVAL |
| SEE FINISH NOTE | | | | MS-1903 A |
| FINISH & SPEC. NO. | | | | |

| REQ PER UNIT | MODEL | PROJECT NO. | ASS'Y. NO. | DATE |
|---|---|---|---|---|
| 1 | SLM-2 | | | 10-19-59 |
| | USED ON | | | |

| ISSUE | ITEM | CHANGED FROM | DATE | CN. NO. | DRAFTS | CHECKER | ENG. APP. |
|---|---|---|---|---|---|---|---|
| A | | 4 "H" HOLES ADDED | 5.1.64 | 11317 | AB | @ | [illegible] |

TOLERANCES

ALL OTHERS: DEC. DIM. ± FRAC. DIM. ± ANGULAR DIM. ±

SCALE:

DRILL, PUNCH, COMMERCIAL STOCK SIZES AND MANUFACTURERS TOLERANCES ARE NOT INCLUDED.

FORM—111

IF IT IS FOUND DESIRABLE TO CHANGE ANY TOLERANCE OR OTHER DETAIL SPECIFIED ON THIS DRAWING NOTIFY THE PURCHASER PROMPTLY.

MAXIMUM ALLOWABLE TOLERANCES HAVE BEEN DETERMINED AND DEVIATIONS WILL BE CAUSE FOR REJECTION. REMOVE ALL BURRS AND SHARP EDGES

NOTICE TO PERSONS RECEIVING THIS DRAWING

THE TECHNICAL MATERIEL CORPORATION claims proprietary right in the material disclosed hereon. This drawing is issued in confidence for engineering information only and may not be reproduced or used to manufacture anything shown hereon without permission from THE TECHNICAL MATERIEL CORPORATION to the user. This drawing is loaned for mutual assistance and is subject to recall at any time.

Property of:
THE TECHNICAL MATERIEL CORPORATION
MAMARONECK, NEW YORK

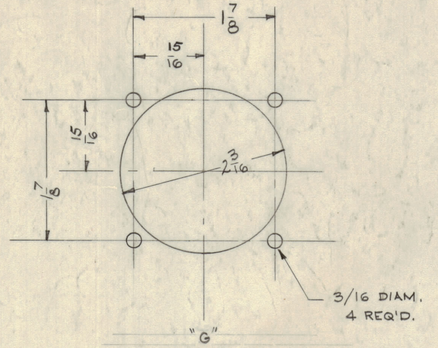


DETAIL
2-REQ'D.

FRONT VIEW

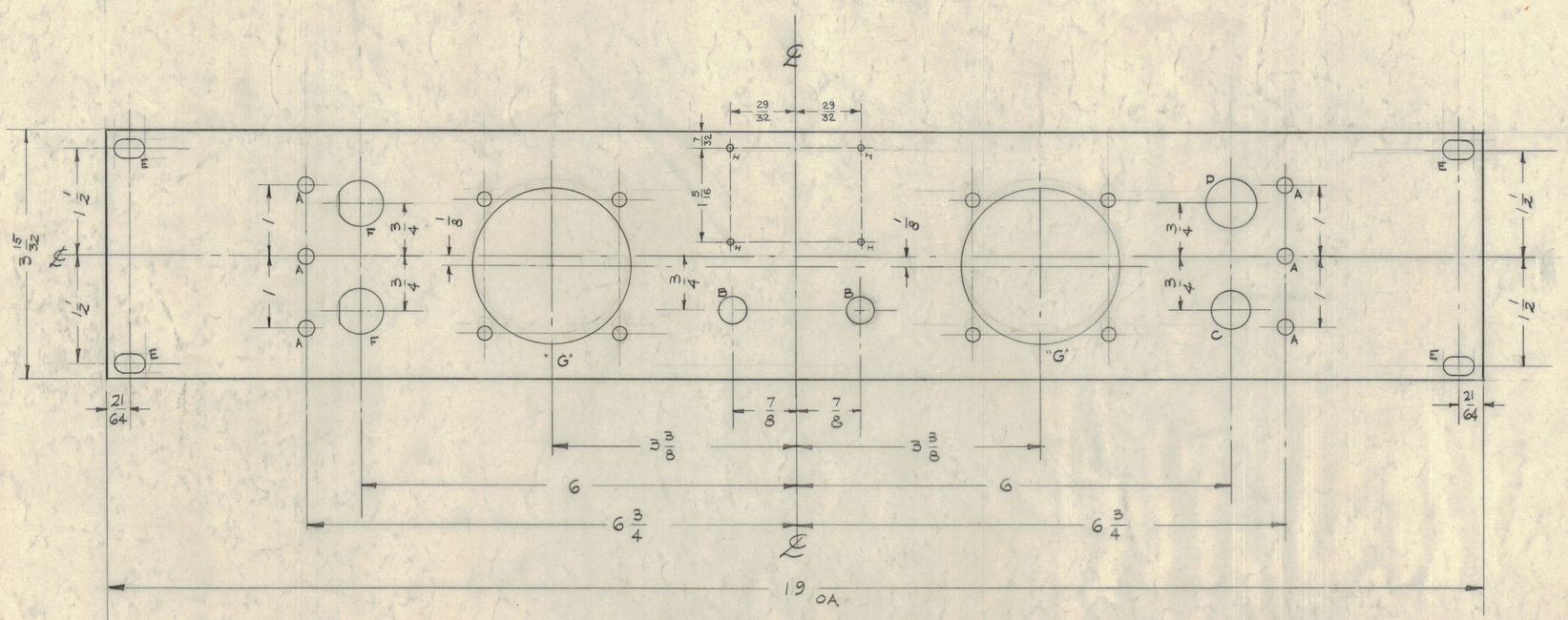


| HOLES | REQ'D. |
|---|---|
| A - 7/32 (.218) DIAM. | 6 |
| B - 3/8 (.375) " | 2 |
| C - 17/32 (.531) " | 1 |
| D - 11/16 (.687) " | 1 |
| E - 1/4 x 13/32 SLOT | 4 |

F - 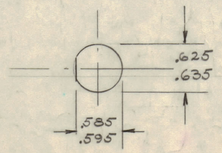 2 Req.


H - 5/64 (.078) DIA — — — — — 4 REQ'D

MS-1903 A

MACHINING
1.- LATERAL BOW OF PANEL MUST BE KEPT TO .031 TOLERANCE.
2-MILL ALL EDGES
3-HOLES MUST BE DRILLED
4-PANEL MUST BE FREE OF ALL MACHINING MARKS, GOUGES, & SCRATCHES.

FINISH NOTE:
S404 YELLOW IRIDITE
S114 ZINC CHROMATE PRIMER } FRONT & EDGES ONLY
S115 SMOOTH GREY ENAMEL

8-LD-634 - LET. REAR
REF: 8-LD-635 - ENG. FRONT PANEL

| REQ. | ITEM | PART NO. | DESCRIPTION | SYMBOL |
|---|---|---|---|---|
| 3/16 | | | THE TECHNICAL MATERIEL CORP. MAMARONECK. NEW YORK | |
| STOCK SIZE | | | | |
| ALUMINUM | | | PANEL, FRONT | |
| MATERIAL | WEIGHT PER PC. | | SIDEBAND LEVEL MONITOR | |
| 2024 -T3 | | | | |
| TYPE & TEMPER | | | DRAWN: TORILLO 10-20-59 | ELEC. DES. APP.: T.A. / MECH. DES. APP. |
| HEAT TREAT. SPEC. | | | CHECKED | FINAL APPROVAL |
| SEE FINISH NOTE | | | | MS-1903 A |
| FINISH & SPEC. NO. | | | | |

| REQ PER UNIT | MODEL | PROJECT NO. | ASS'Y. NO. | DATE |
|---|---|---|---|---|
| 1 | SLM-2 | | | 10-19-59 |
| USED ON | | | | |

| ISSUE | ITEM | CHANGED FROM | DATE | CN. NO. | DRAFTS | CHECKER | ENG. APP. |
|---|---|---|---|---|---|---|---|
| A | | 4 "H" HOLES ADDED | 5.1.64 | 11317 | ASB | @ | DB |

TOLERANCES: ALL OTHERS — DEC. DIM. ± FRAC. DIM. ± ANGULAR DIM. ±

SCALE: DRILL, PUNCH, COMMERCIAL STOCK SIZES AND MANUFACTURERS TOLERANCES ARE NOT INCLUDED.

FORM—111