IF IT IS FOUND DESIRABLE TO CHANGE ANY TOLERANCE OR OTHER DETAIL SPECIFIED ON THIS DRAWING NOTIFY THE PURCHASER PROMPTLY.

MAXIMUM ALLOWABLE TOLERANCES HAVE BEEN DETERMINED AND DEVIATIONS WILL BE CAUSE FOR REJECTION. REMOVE ALL BURRS AND SHARP EDGES

NOTICE TO PERSONS RECEIVING THIS DRAWING

THE TECHNICAL MATERIEL CORPORATION claims proprietary right in the material disclosed hereon. This drawing is issued in confidence for engineering information only and may not be reproduced or used to manufacture anything shown hereon without permission from THE TECHNICAL MATERIEL CORPORATION to the user. This drawing is loaned for mutual assistance and is subject to recall at any time.

Property of:

THE TECHNICAL MATERIEL CORPORATION
MAMARONECK, NEW YORK

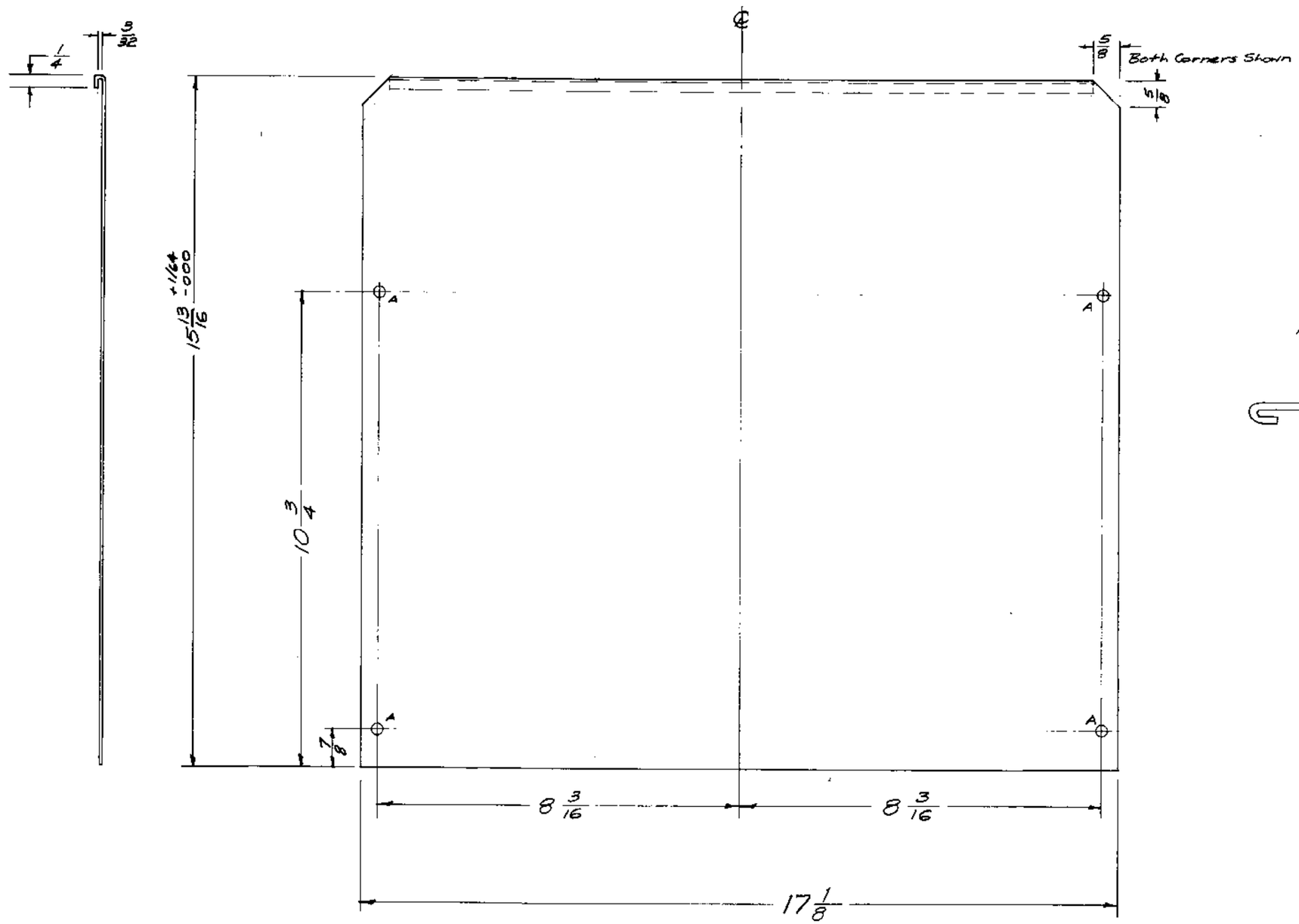

A - 1/4 (.250) Diam. 4 Req.

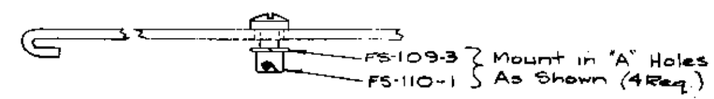

MS-1251 B

ISSUE	ITEM	CHANGED FROM	DATE	CH. NO.	DRAFTS	CHECKER	ENG. APP.
B	1	5052 - IRIDITE 5101 - CAUSTIC DIP	12-9-57	1501			BMN
A	2	TWO "A" HOLES DELE.	7/3/58	404			
	1	DUTCH FOLD ADDED TO REAR OF COVER					

TOLERANCES — SCALE: 1/2

ALL OTHERS: DEC. DIM. ± ; FRAC. DIM. ± 1/64 ; ANGULAR DIM. ±

DRILL, PUNCH, COMMERCIAL STOCK SIZES AND MANUFACTURERS TOLERANCES ARE NOT INCLUDED.

FORM—110

UNLESS OTHERWISE SPECIFIED DIMENSIONS ARE IN INCHES AND TOLERANCES ARE APPLIED ON PLACE DECIMALS. TOLERANCES

REQ PER UNIT	MODEL	PROJECT NO.	ASS'Y. NO.	DATE
1	RFA-1	PAL-350		5-20-58

USED ON

REQ.	ITEM	PART NO.	DESCRIPTION	SYMBOL
.051 THK.			THE TECHNICAL MATERIEL CORP. MAMARONECK. NEW YORK	
STOCK SIZE				
Aluminum			COVER, BOTTOM	
MATERIAL	WEIGHT PER PC.			
5052-H32				
TYPE & TEMPER				
			5/20/58	ZER
			DRAWN	ELEC. DES. APP. / MECH. DES. APP.
			CHECKED	FINAL APPROVAL
HEAT TREAT. SPEC.				
5404 - IRIDITE				
FINISH & SPEC. NO.				

MS-1251 B