IF IT IS FOUND DESIRABLE TO CHANGE ANY TOLERANCE OR OTHER DETAIL SPECIFIED ON THIS DRAWING NOTIFY THE PURCHASER PROMPTLY.

MAXIMUM ALLOWABLE TOLERANCES HAVE BEEN DETERMINED AND DEVIATIONS WILL BE CAUSE FOR REJECTION. REMOVE ALL BURRS AND SHARP EDGES

A — $\frac{11}{64}$ (.171) D. — 15 Req.
B — $\frac{9}{32}$ (.281) D. — 1 Req.
* C — $\frac{5}{16}$ (.312) D. — 1 Req.
D — $\frac{3}{8}$ (.375) D. — 3 Req.
* E — $\frac{7}{16}$ (.437) D. — 1 Req.
F — 1.000 D. — 1 Req.

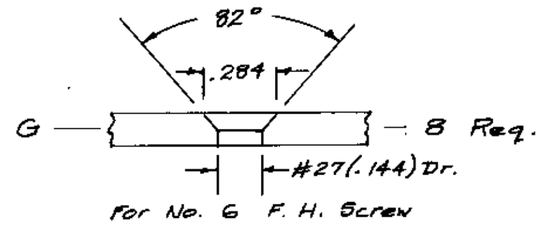

* = These Diameters must be held after etching.

H - $\frac{9}{64}$ (.140) D. — 1 REQ.

MS-1103 C

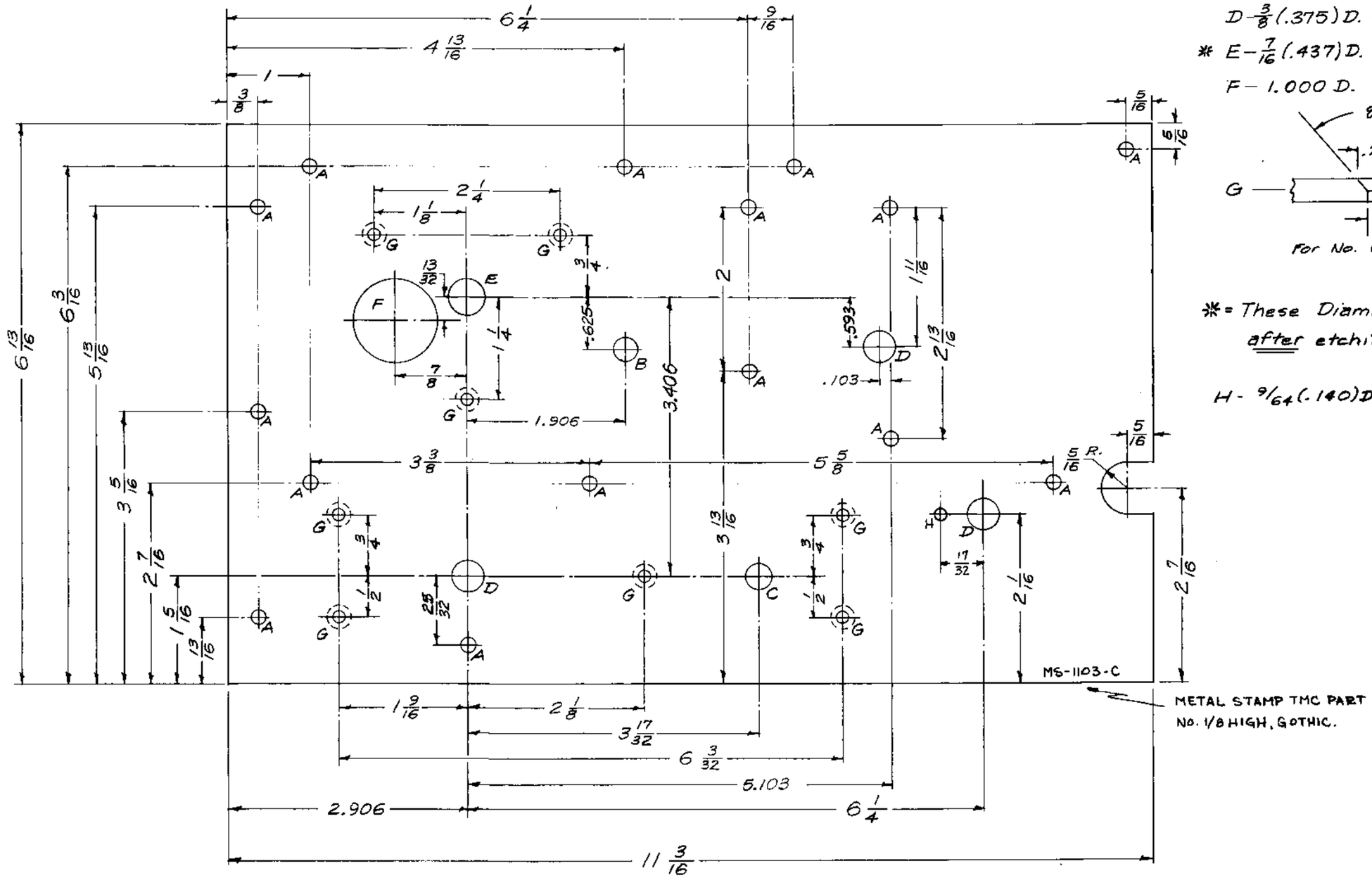

METAL STAMP TMC PART NO. 1/8 HIGH, GOTHIC.

ISSUE	ITEM	CHANGED FROM	DATE	CN. NO.	DRAFTS	CHECKER	ENG. APP.
C	1	(1) "H" HOLE RELOCATED	1-9-63	7984			
B	1	S404 - IRIDITE & 101 - CAUSTIC DIP	12-8-59	1801			EMN
A	1	6 3/16 WAS 6 5/16 H Hole Added	11/19/57	1	16		

TOLERANCES: DEC. DIM. ± ; FRAC. DIM. ± 1/64 ; ANGULAR DIM. ± ; ALL OTHERS

SCALE: FULL — 4-1021

DRILL, PUNCH, COMMERCIAL STOCK SIZES AND MANUFACTURERS TOLERANCES ARE NOT INCLUDED.

NOTICE TO PERSONS RECEIVING THIS DRAWING

THE TECHNICAL MATERIEL CORPORATION claims proprietary right in the material disclosed hereon. This drawing is issued in confidence for engineering information only and may not be reproduced or used to manufacture anything shown hereon without permission from THE TECHNICAL MATERIEL CORPORATION to the user. This drawing is loaned for mutual assistance and is subject to recall at any time.

Property of:
THE TECHNICAL MATERIEL CORPORATION
MAMARONECK, NEW YORK

REQ. PER UNIT	MODEL	PROJECT NO.	ASSY. NO.	DATE
1	5BE-1			7-23-57

USED ON

REQ.	ITEM	PART NO.	DESCRIPTION	SYMBOL
		1/8 THK.	THE TECHNICAL MATERIEL CORP. MAMARONECK, NEW YORK	
STOCK SIZE				
Aluminum		—	GEAR PLATE, MAIN	
MATERIAL		WEIGHT PER PC.	5BE-1	
2024-T3				
TYPE & TEMPER				
—				
HEAT TREAT. SPEC.				
S404 YEL IRIDITE				
FINISH & SPEC. NO.				

DRAWN	ELEC. DES. APP.	MECH. DES. APP.
7-23-57		
CHECKED	FINAL APPROVAL	

MS-1103 C

FORM — 110