IF IT IS FOUND DESIRABLE TO CHANGE ANY TOLERANCE OR OTHER DETAIL SPECIFIED ON THIS DRAWING NOTIFY THE PURCHASER PROMPTLY.

MAXIMUM ALLOWABLE TOLERANCES HAVE BEEN DETERMINED AND DEVIATIONS WILL BE CAUSE FOR REJECTION. REMOVE ALL BURRS AND SHARP EDGES

A- NO. 47 (.078) D.	4 HOLES REQ.
B- 9/64 (.140) X 1/8 DP. FROM REAR	1 " "
C- 11/64 (.171) D.	4 " "
D- 9/32 (.281) D.	1 " "
E- 25/64 (.390) D.	1 " "
F- DRILL & C'SINK 4-40 F.H.S.*	2 " "
G- DRILL & TAP 6-32	2 " "
J- 9/64 DIA	16 " "

"F"

DIM.	#4 F.H.S.
X	#31 (.120)
Y	.230

TOL. ± .005

* DRILLING DETAIL FOR FLAT HEAD SCREWS. DIM. SHOWN ARE AFTER PAINTING.

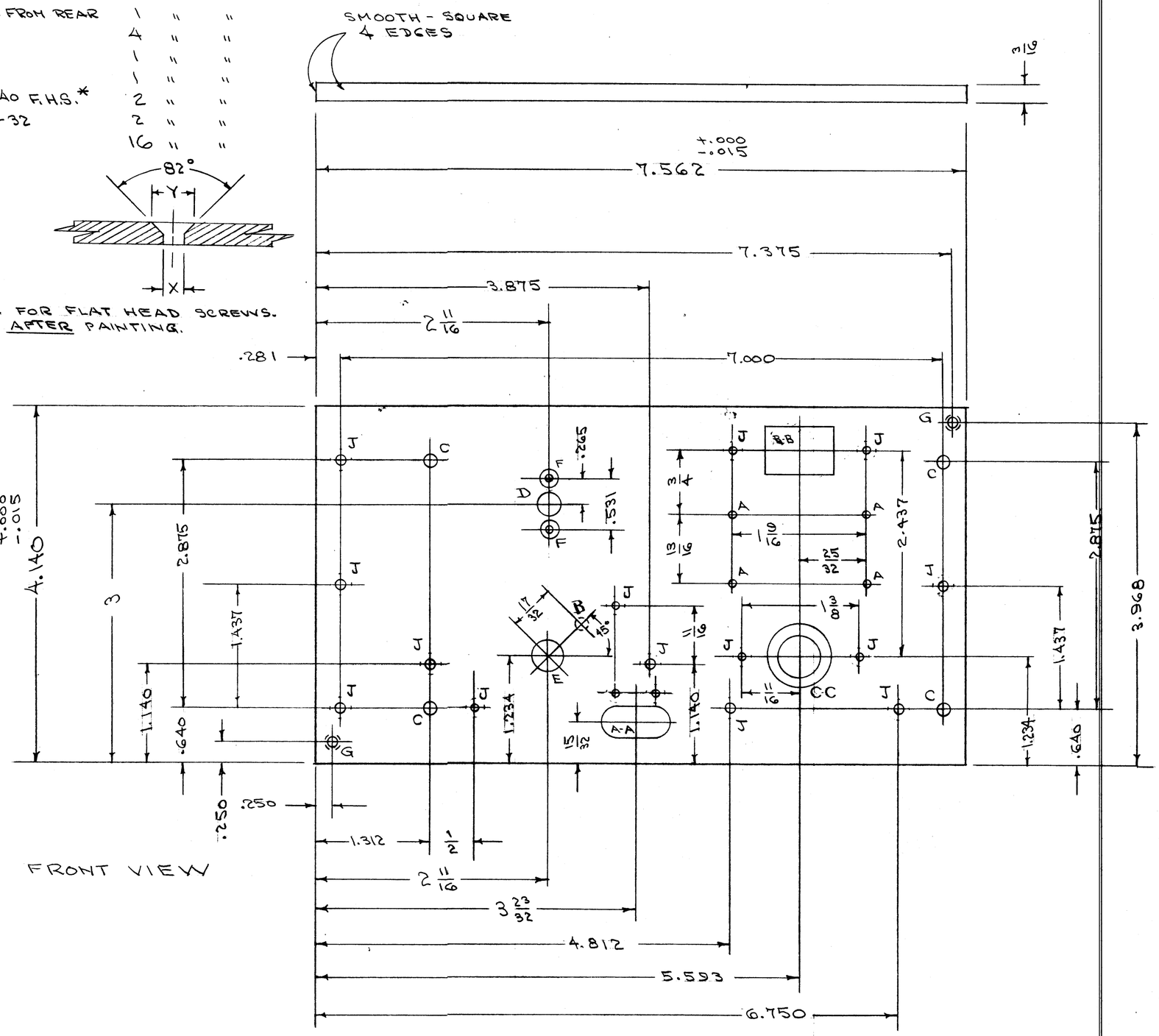

FRONT VIEW

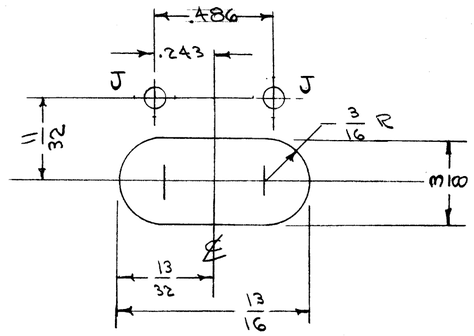

DETAIL A-A 1 REQ.

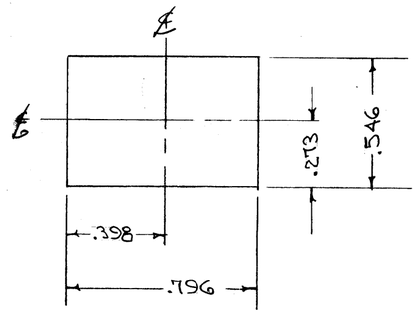

DETAIL B-B 1 REQ.

MS-155 D

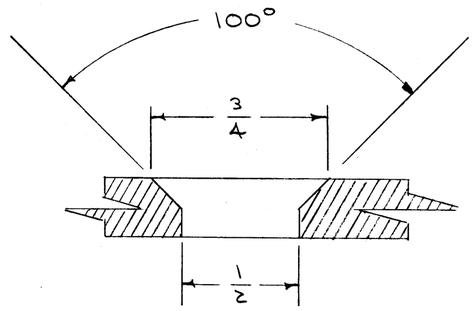

DETAIL C-C 1 REQ.

NOTE- FINISH
S-404 YEL-IRIDITE
FRONT & EDGES ONLY { S-114 ZINC CHROMATE PRIMER
S-115 SMOOTH GREY ENAMEL
OR - PRIME & PAINT TO CUSTOMERS SPECIFICATION.

REF. DWG. LD-120 & LD-221 ENGRAVING

ISSUE	ITEM	CHANGED FROM	DATE	CN. NO.	DRAFTS	CHECKER	ENG. APP.
D	1	"J" HOLES REVISED TO ACCEPT PAN HD. SCREWS	1/16/64	10738			
C	1	S404 - YEL - IRIDITE S101 CAUSTIC DIP	12-9-59	1001			EMN
B	3	FHS CHART ADDED	1/5/55	2			
	2	E HOLE WAS 3/8					
	1	REDRAWN					

TOLERANCES	
ALL OTHERS	DEC. DIM. ± .005 FRAC. DIM. ± 1/64 ANGULAR DIM. ± 1°

SCALE:

DRILL, PUNCH, COMMERCIAL STOCK SIZES AND MANUFACTURERS TOLERANCES ARE NOT INCLUDED.

REQ PER UNIT	MODEL	PROJECT NO.	ASS'Y. NO.	DATE
1	FFRD-3M		A-228	1-7-64
1	FFRD 5/6/7/8	104	A-228	12-22-52

USED ON

REQ.	ITEM	PART NO.	DESCRIPTION	SYMBOL
3/16 THK.			THE TECHNICAL MATERIEL CORP. MAMARONECK, NEW YORK	
STOCK SIZE				
ALUMINUM		— " —	PANEL, FRONT	
MATERIAL		WEIGHT PER PC.	R.F. HEAD	
24S T3				
TYPE & TEMPER			C.D.D. 1-5-55	
— " —			DRAWN / ELEC. DES. APP. / MECH. DES. APP.	
HEAT TREAT. SPEC.			1-12-55	
SEE NOTE			CHECKED / FINAL APPROVAL	
FINISH & SPEC. NO.			MS-155	D

FORM — 110