SPECIFICATIONS:

1- CASE ~ STANDARD SIMPSON Nº 127.
2- MOVEMENT ~ 50 ua.
3- APPROX. RESISTANCE ~ 2000 Ω.
4- POINTER TYPE ~ KNIFE EDGE.
5- ALL NECESSARY MOUNTING & TERMINAL HARDWARE, SUPPLIED BY MFG

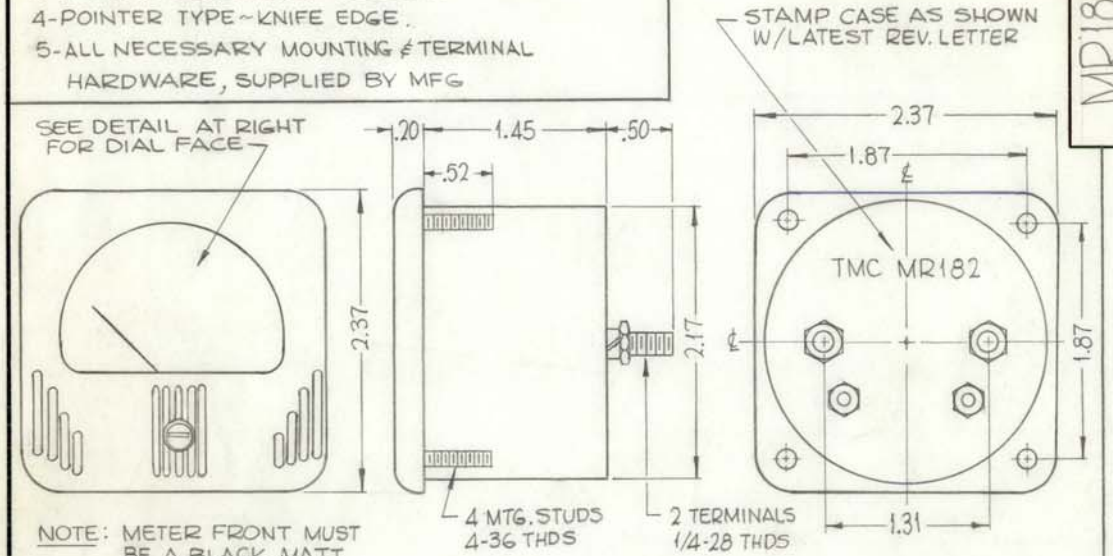

NOTE: METER FRONT MUST BE A BLACK MATT FINISH, WITH LINE DESIGN AS SHOWN.

NOTES:

1~ ALL LETTERS, NUMBERS & DOTS BELLOW SCALE ARE IN RED.
2~ SCALE ABOVE "0" DBM IS RED.
3~ SCALE BELOW "0" DBM IS BLACK.
4~ ALL LETTERS, NUMBERS AND GRADUATIONS ABOVE SCALE ARE IN BLACK.
5~ TMC INSIGNIA IN BLACK. (NP117)
6~ BACKGROUND TO BE WHITE.

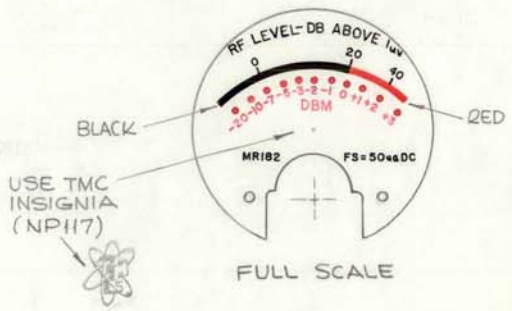

FULL SCALE

Q'T'Y./UNIT	MODEL USED ON	ASS'Y. NO.
1	SMR - 1	

SCALE —//— CODE A

NOTES

THE CONTENTS OF THIS DRAWING ARE THE EXCLUSIVE PROPERTY OF THE TECHNICAL MATERIEL CORP. ITS UNAUTHORIZED USE OR REPRODUCTION IN WHOLE OR IN PART IS STRICTLY FORBIDDEN.

MR182 Ø

REVISIONS

SYM	DESCRIPTION	DATE	E.M.N. NO.	DRAFT	CHKD	APPD
X	EXPERIMENTAL RELEASE	7-2-64		SRG		
Ø	ORIGINAL RELEASE FOR PRODUCTION	8.25.64	+	[illegible]		

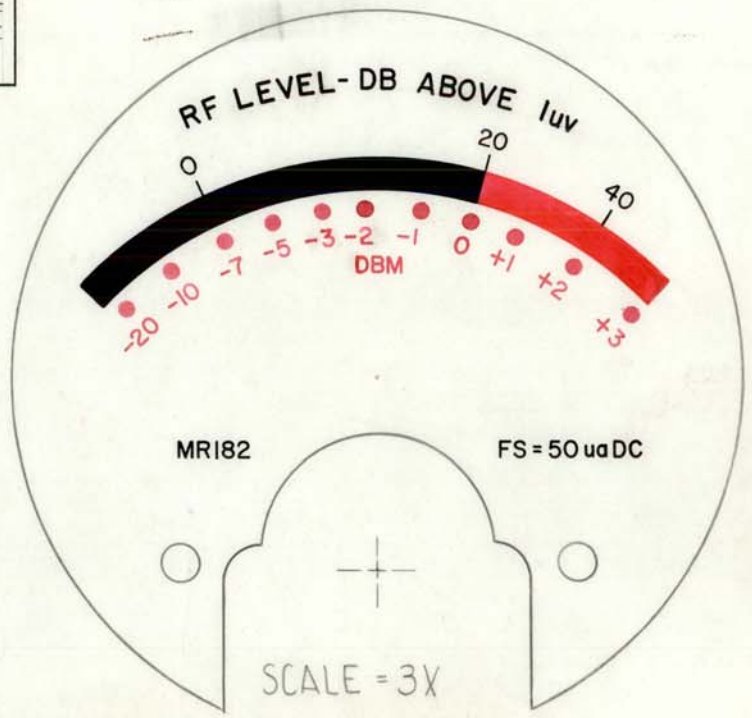

ORIGINAL ARTWORK TO BE SUPPLIED BY TMC FOR PHOTOGRAPHING (SCALE 3:1)

REQ'D.	ITEM	PART NUMBER	DESCRIPTION	SYMBOL

T. AALTONEN

LIST OF MATERIAL

MATERIAL —//—

FINISH —//—

UNLESS OTHERWISE SPECIFIED
DIMENSIONS ARE IN INCHES AND INCLUDE CHEMICALLY APPLIED OR PLATED FINISHES

DECIMALS .X ± .05 .XX ± .01 .XXX ± .005 — TOLERANCES — FRACTIONS ± 1/64 ANGLES ± 0° 30'

THE TECHNICAL MATERIEL CORP.
MAMARONECK, NEW YORK

TITLE METER, AF/RF

DRAWN SRG	DATE 7-2-64	FINAL APPROVAL RDC	DATE
CHECKED @	DATE 8-25-64	MR182	Ø
ELECT. DES. RdW	DATE 7-1-64		
MECH. DES. RdW	DATE 8/25/64	SHEET	REV. LTR.

TMC FORM 109

STOCK NO. 440H