MR-154 B

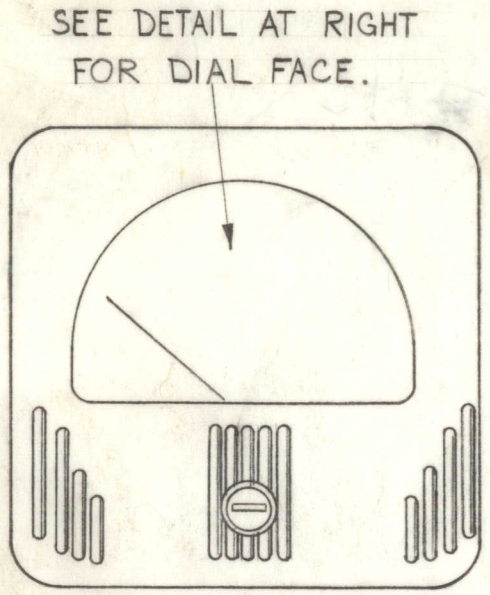

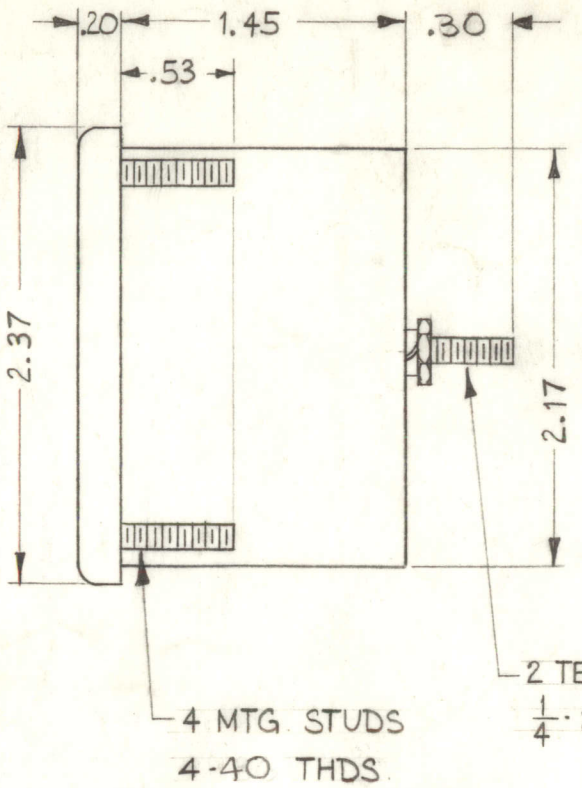

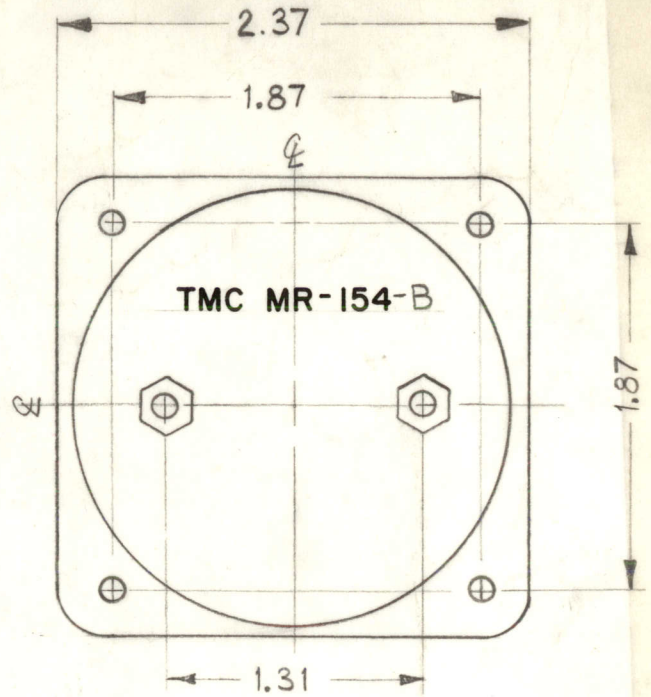

NOTE ~ METER FRONT MUST BE A BLACK MATT FINISH, WITH LINE DESIGN AS SHOWN.

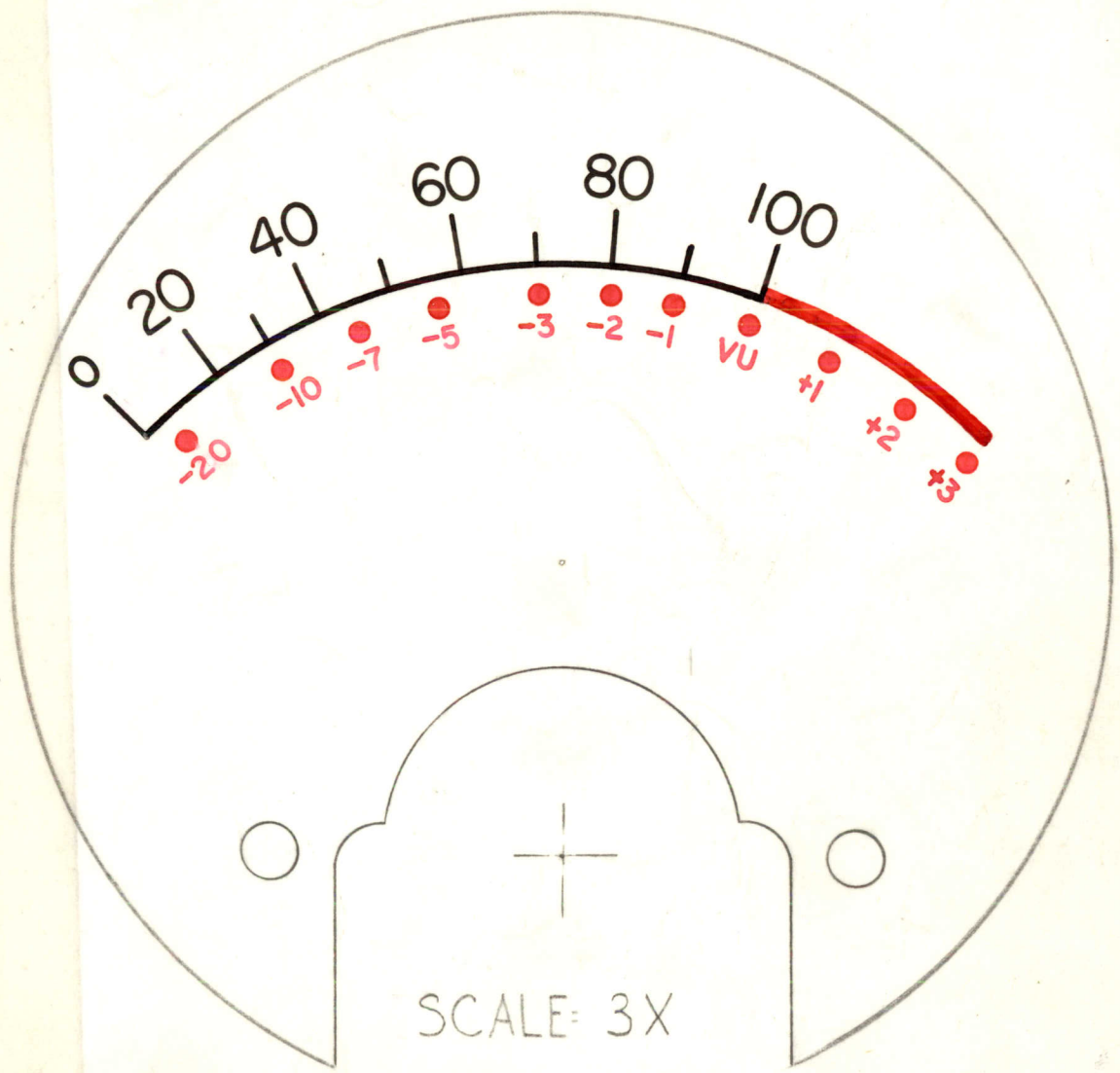

SPECIFICATIONS:

CASE ~ STANDARD SIMPSON Nº 147.
REFERENCE LEVEL ~ 1MW 600Ω LINE.
INTERNAL IMPEDANCE ~ 3900Ω.
SCALE ~ "B".
POINTER TYPE ~ KNIFE EDGE.
ALL NECESSARY MOUNTING & TERMINAL HARDWARE SUPPLIED BY MFG.

CALIBRATION MARKS TO BE BLK FROM 0 TO 100
RED FROM 100 TO +3
UPPER NUMERALS TO BE BLK.
LOWER NUMERALS TO BE RED.
CALIBRATION DOTS TO BE RED.

WHITE BACKGROUND

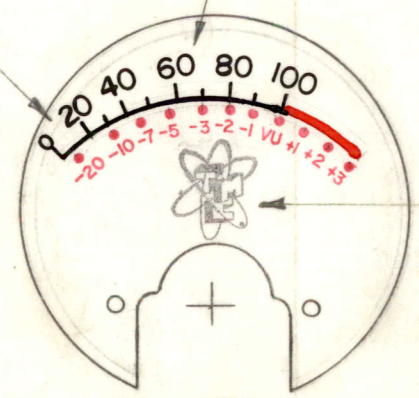

TMC INSIGNIA (BLK).

FULL SCALE

SYM	DESCRIPTION	DATE	CH. NO.	DRAFTS	CHECKER	ENG. APP.
B	MTG STUDS WERE 4-36 THD	6-12-63	9243	[illegible]	[illegible]	[illegible]
A	Internal Impedance Was 3800Ω	11-14-61	5854	LL	[illegible]	[illegible]

UNLESS OTHERWISE SPECIFIED:
DIMENSIONS ARE IN INCHES
TOLERANCES ON
FRACTIONS ± 1/64 DECIMALS ± .005 ANGLES ± 1/2°

A

SCALE: DO NOT SCALE (S401-44)

MAXIMUM ALLOWABLE TOLERANCES HAVE BEEN DETERMINED AND ANY DEVIATIONS WILL BE CAUSE FOR REJECTION. REMOVE ALL BURRS AND SHARP EDGES

REQ. PER UNIT	MODEL	SECTION	ASS'Y. NO.	DATE
2	SBS-1			10-18-61
2	HFA-1			10-18-61

USED ON

REQ.	ITEM	PART NO.	DESCRIPTION	SYMBOL
			THE TECHNICAL MATERIEL CORP. MAMARONECK, NEW YORK	
		STOCK SIZE	METER, VU	
		MATERIAL		
		TYPE & TEMPER / HEAT TREAT. SPEC.	DRAWN: W.A.F. / CHECKER: [illegible] / FINAL APPROVAL: G.R.F.	
		FINISH & SPEC. NO.	ELEC. DES. APP.: G.R.F. / MECH. DES. APP.	MR-154 B

TMC FORM NO. 109

DEFIANCE NO. 1020 36352