MR-149 B

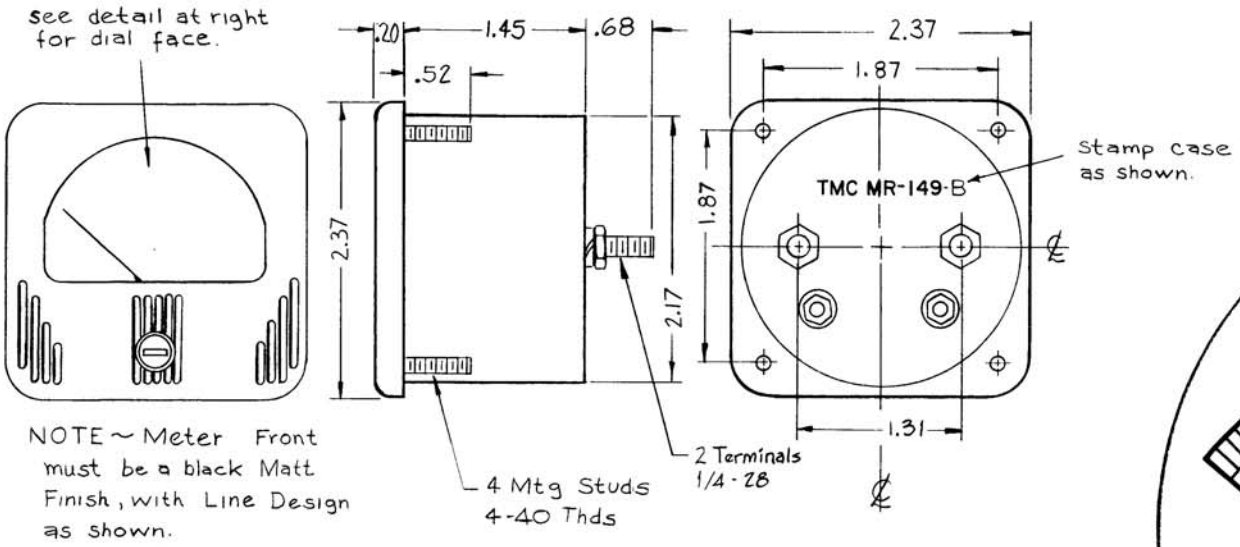

NOTE ~ Meter Front must be a black Matt Finish, with Line Design as shown.

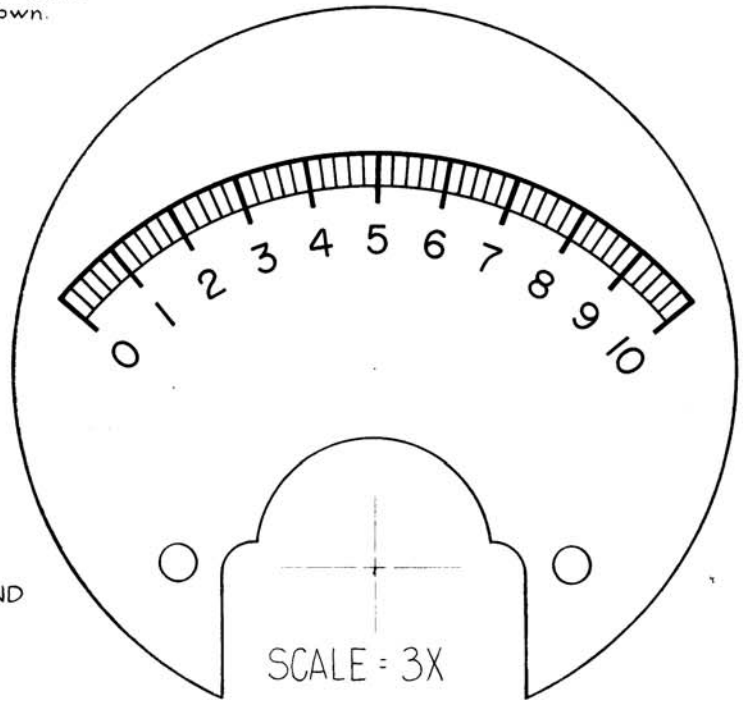

SPECIFICATIONS:

Case ~ standard Simpson Nº 127
Movement ~ 0-25 μA.
Approx ~ resistance ~ 2200 ohms
Pointer Type ~ knife edge. All necessary mounting & terminal hardware supplied by mfg.

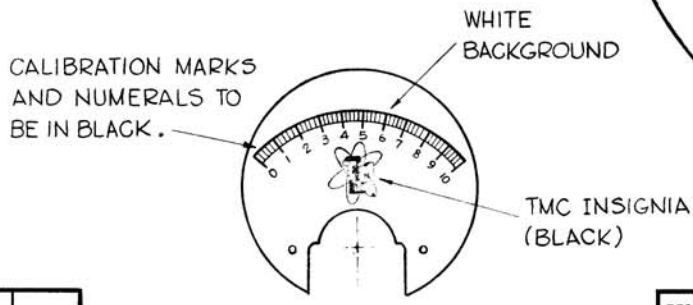

FULL SCALE

SYM	DESCRIPTION	DATE	CH. NO.	DRAFTS	CHECKER	ENG. APP.
B	MTG STUDS WERE 4-36 THD	6-12-63	9243	[illegible]	[illegible]	[illegible]
A	(2) Terminals were 8-32 Th'ds 1.31 Dim was 1.00 .52 Dim was .54	3/30/61	4541	W.A.F.	JCB	

UNLESS OTHERWISE SPECIFIED:
DIMENSIONS ARE IN INCHES
TOLERANCES ON
FRACTIONS ± 1/64 DECIMALS ± .005 ANGLES ± 1/2°

SCALE:
MAXIMUM ALLOWABLE TOLERANCES HAVE BEEN DETERMINED AND ANY DEVIATIONS WILL BE CAUSE FOR REJECTION. REMOVE ALL BURRS AND SHARP EDGES

REQ. PER UNIT	MODEL	SECTION	ASS'Y. NO.	DATE
1	CHG			11-19-60

USED ON

REQ.	ITEM	PART NO.	DESCRIPTION	SYMBOL
			THE TECHNICAL MATERIEL CORP. MAMARONECK, NEW YORK	
		STOCK SIZE	METER, OUTPUT	
		MATERIAL		
		TYPE & TEMPER / HEAT TREAT. SPEC.	DRAWN: R.Hzzo / CHECKER: [illegible] / FINAL APPROVAL: [illegible]	
		FINISH & SPEC. NO.	ELEC. DES. APP.: A.R.J. / MECH. DES. APP.	MR-149 B

TMC FORM NO. 109

DEFIANCE NO. 1020