MR-147 | A

NOTE:
ALL NUMERALS, LETTERS, MAJOR AND MINOR CALIBRATION POINTS ARE TO BE IN BLACK.

INSERT TMC INSIGNIA (NP-117) IMMEDIATELY BELOW WORD KILOWATTS CENTERED TO BOTTOM IN BLACK.

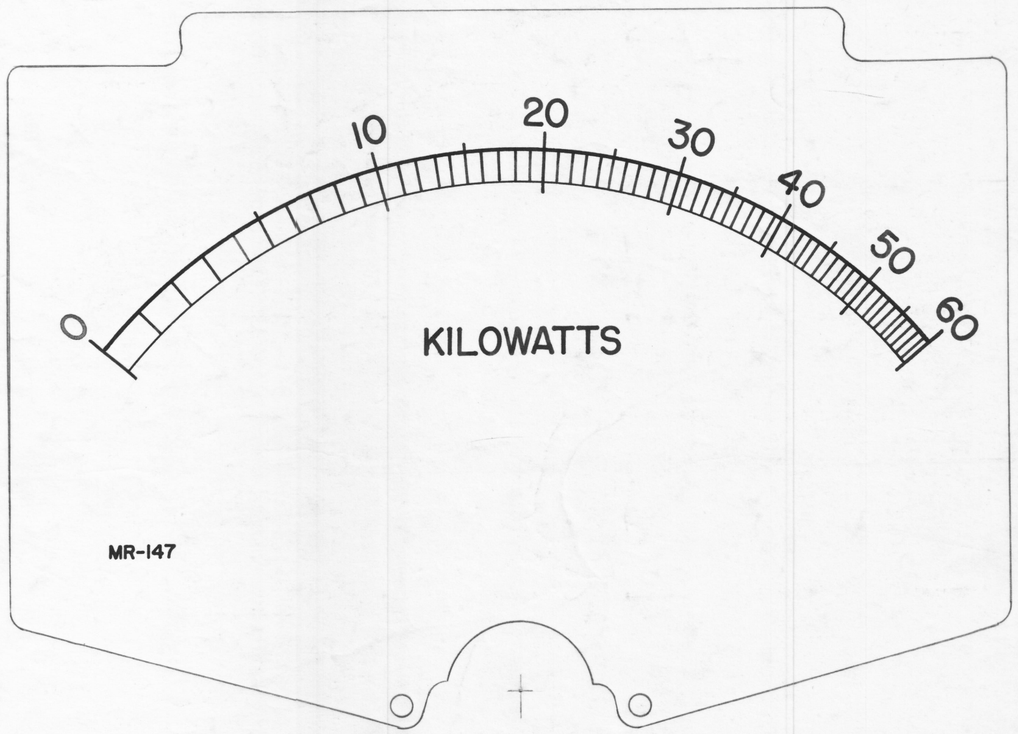

SCALE=2X

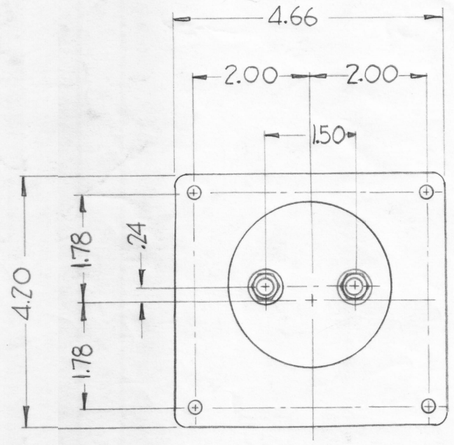

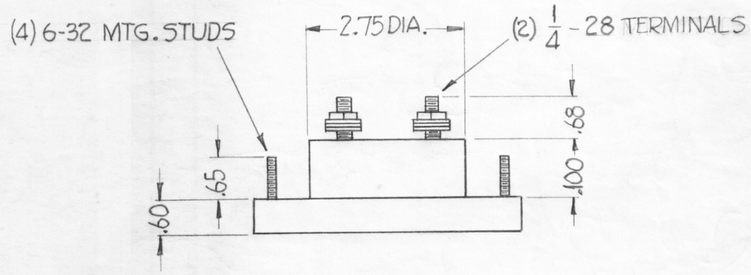

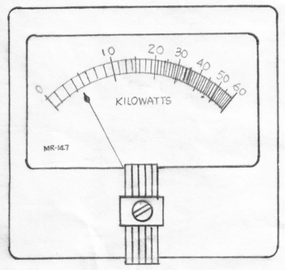

NOTES:
CASE-STANDARD COMMERCIAL RECTANGULAR $4\frac{1}{2}$".

FINISH-GLOSSY BLACK.

MOVEMENT-0-100 MICROAMPS.

APPROXIMATE RESISTANCE-2000 Ω.

POINTER-SPADE TYPE.

HARDWARE-(2) FLAT WASHERS, (2) $\frac{1}{4}$-28 HEXAGON NUTS FOR TERMINALS, (4) LOCKWASHERS, (4) 6-32 HEXAGON NUTS FOR MOUNTING, SUPPLIED BY MANUFACTURER.

DESIGNED FOR USE W/THRULINE DIRECTIONAL WATTMETER TMC #DC-101-1.

SYM	ZONE	DESCRIPTION	DATE	CH. NO.	DRAFTS	CHECKER	ENG. APP.
A	F1	1/4-28 TERMINALS WAS 1/4-28 MTG. STUDS	4/3/61	4538	DJM	GB	JB

UNLESS OTHERWISE SPECIFIED:
DIMENSIONS ARE IN INCHES
TOLERANCES ON
FRACTIONS ± 1/64 DECIMALS ± .005 ANGLES ± 1/2°

SCALE

MAXIMUM ALLOWABLE TOLERANCES HAVE BEEN DETERMINED AND ANY DEVIATIONS WILL BE CAUSE FOR REJECTION.
REMOVE ALL BURRS & SHARP EDGES

REQ. PER UNIT	MODEL	SECTION	ASS'Y. NO.	DATE
1	GPT-40K			11-18-60

USED ON

REQ.	ITEM	PART NO.	DESCRIPTION	SYMBOL
			THE TECHNICAL MATERIEL CORP. MAMARONECK, NEW YORK	
STOCK SIZE			METER, KILOWATTS	
MATERIAL				
TYPE & TEMPER	HEAT TREAT. SPEC.		DRAWN: D.J. Mann 11-18-60	CHECKED: JWe
FINISH & SPEC. NO.			FINAL APPROVAL: JB	
			ELEC. DES. APP.	MECH. DES. APP.
			SHEET MR-147 OF	A

TMC FORM NO. 110 DEFIANCE NO. 1020 36352