IF IT IS FOUND DESIRABLE TO CHANGE ANY TOLERANCE OR OTHER DETAIL SPECIFIED ON THIS DRAWING NOTIFY THE PURCHASER PROMPTLY.

MAXIMUM ALLOWABLE TOLERANCES HAVE BEEN DETERMINED AND DEVIATIONS WILL BE CAUSE FOR REJECTION. REMOVE ALL BURRS AND SHARP EDGES

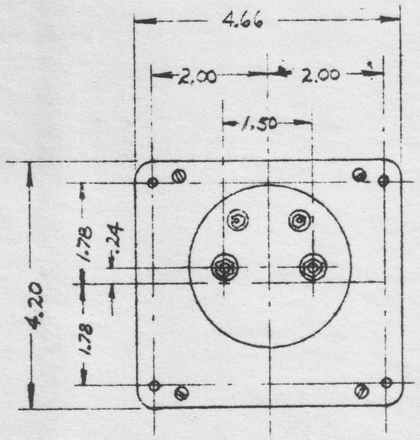

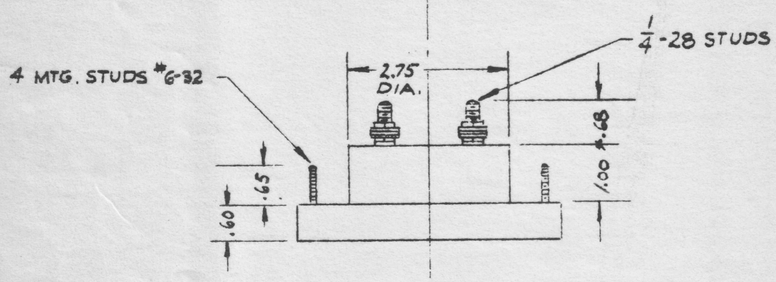

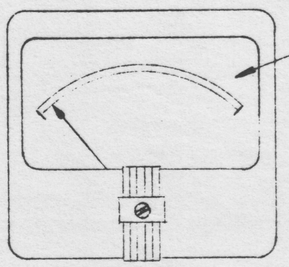

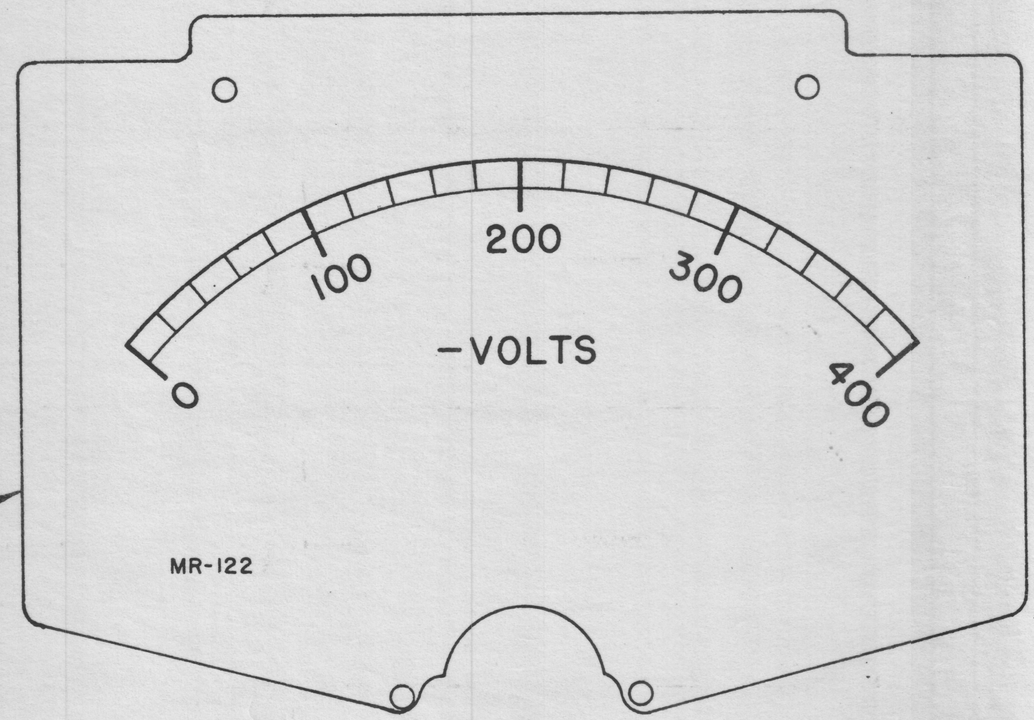

SCALE 2X

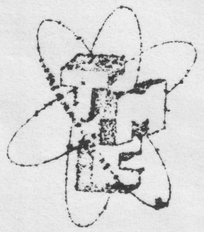

"A"

INSERT TMC INSIGNIA IMMEDIATELY BELOW THE WORD VOLTS CENTERED TO BOTTOM.

MR-122

NOTES:

CASE - STANDARD COMMERCIAL RECTANGULAR 4 1/2".
FINISH - GLOSSY BLACK
MOVEMENT - 0-1 MILLI-AMPS
APPROX. RESISTANCE - 46 OHMS
POINTER - SPADE TYPE
HARDWARE - TWO FLAT WASHERS AND TWO 1/4-28 HEX NUTS FOR TERMINALS.
FOUR LOCKWASHERS AND FOUR 6-32 HEX NUTS FOR MOUNTING SUPPLIED BY MFG.

NOTICE TO PERSONS RECEIVING THIS DRAWING

THE TECHNICAL MATERIEL CORPORATION claims proprietary right in the material disclosed hereon. This drawing is issued in confidence for engineering information only and may not be reproduced or used to manufacture anything shown hereon without permission from THE TECHNICAL MATERIEL CORPORATION to the user. This drawing is loaned for mutual assistance and is subject to recall at any time.

Property of:

THE TECHNICAL MATERIEL CORPORATION
MAMARONECK, NEW YORK

REQ.	ITEM	PART NO.	DESCRIPTION	SYMBOL
			THE TECHNICAL MATERIEL CORP. MAMARONECK, NEW YORK	
STOCK SIZE			VOLTMETER	
MATERIAL	WEIGHT PER PC			
TYPE & TEMPER			TORILLO / DRAWN; R.G. / ELEC. DES. APP.; MECH. DES. APP.	
HEAT TREAT SPEC.			CHECKED; FINAL APPROVAL	
FINISH & SPEC. NO.			MR-122	

ISSUE	ITEM	CHANGED FROM	DATE	CN. NO.	DRAFTS	CHECKER	ENG. APP.
TOLERANCES			SCALE: S-40144 (17-29)				
ALL OTHERS	DEC. DIM. ± .015; FRAC. DIM. ± 1/64; ANGULAR DIM. ±		DRILL, PUNCH, COMMERCIAL STOCK SIZES AND MANUFACTURERS TOLERANCES ARE NOT INCLUDED.				

REQ PER UNIT	MODEL	PROJECT NO.	ASS'Y. NO.	DATE
	USED ON			

FORM—110