IF IT IS FOUND DESIRABLE TO CHANGE ANY TOLERANCE OR OTHER DETAIL SPECIFIED ON THIS DRAWING NOTIFY THE PURCHASER PROMPTLY.

MAXIMUM ALLOWABLE TOLERANCES HAVE BEEN DETERMINED AND DEVIATIONS WILL BE CAUSE FOR REJECTION. REMOVE ALL BURRS AND SHARP EDGES

RELEASED

M0135 Ø

CHARACTERISTICS

VOLTAGE = 115 V AC	60 CYCLES	50 CYCLES
FULL LOAD SPEED	2400 R.P.M.	2000 R.P.M .19 AMPS
NO LOAD SPEED	3400 R.P.M	2800 R.P.M .17 AMPS
DUTY CYCLE	CONTINUOUS	CONTINUOUS
FULL LOAD H.P.	.002	.002
FULL LOAD TORQUE	.055 LB. IN.	.055 LB. IN.

MAXIMUM AMBIENT TEMP. UNDER STALL CONDITIONS = 50°C (122°F)
INSULATION = CLASS "F"
LUBRICATION = HIGH TEMPERATURE TYPE

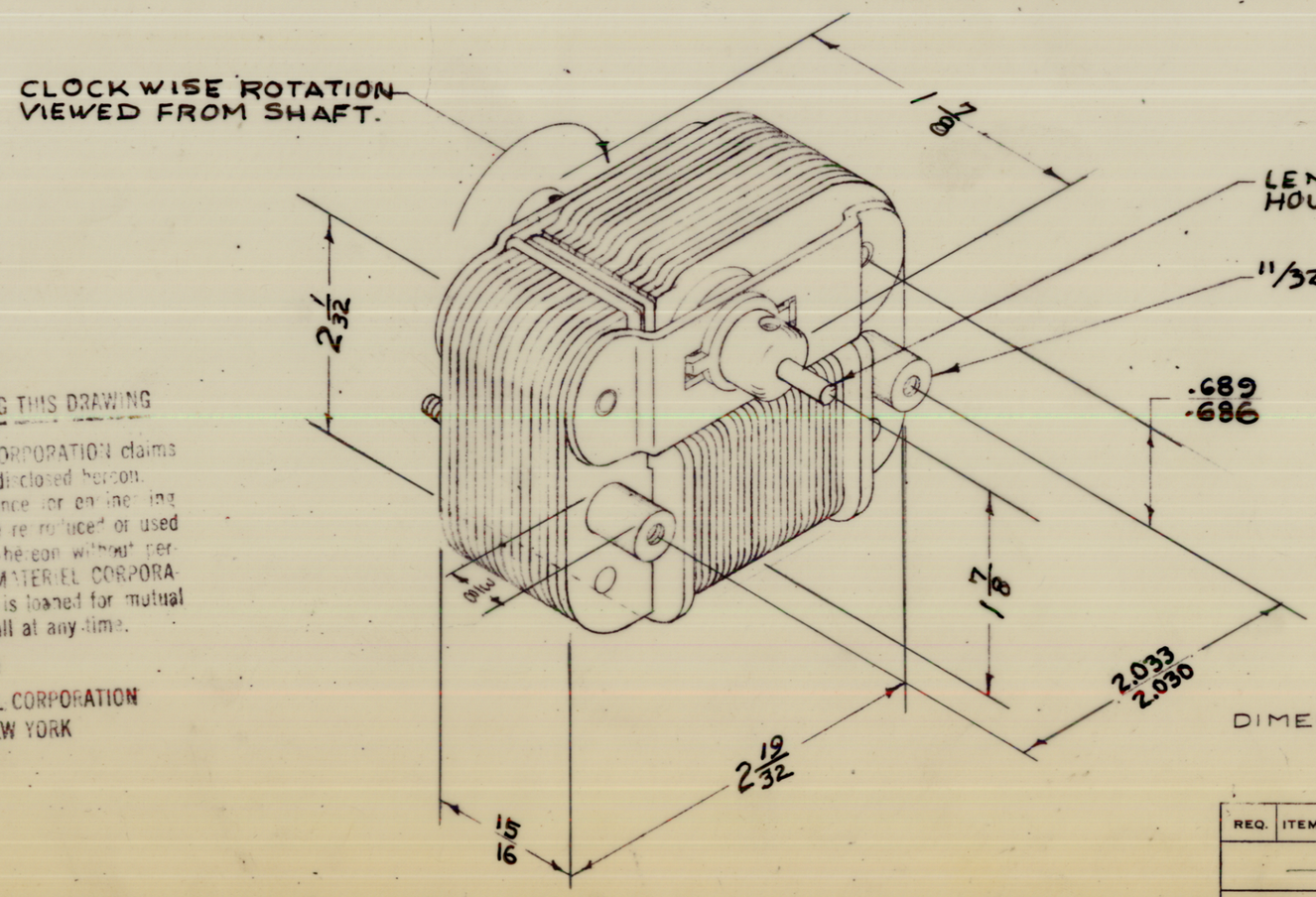

LENGTH OF SHAFT BEYOND BEARING HOUSING = 11/32 SHAFT DIA. .1250 / .1248

11/32 DIA. X 3/8 LONG-TAP 10-32 5/16 DP. 2 REQ'D

DIMENSIONS FOR REF. ONLY.

NOTICE TO PERSONS RECEIVING THIS DRAWING

THE TECHNICAL MATERIEL CORPORATION claims proprietary right in the material disclosed hereon. This drawing is issued in confidence for engineering information only and may not be reproduced or used to manufacture anything shown hereon without permission from THE TECHNICAL MATERIEL CORPORATION to the user. This drawing is loaned for mutual assistance and is subject to recall at any time.

Property of:
THE TECHNICAL MATERIEL CORPORATION
MAMARONECK, NEW YORK

ISSUE	ITEM	CHANGED FROM	DATE	CN. NO.	DRAFTS	CHECKER	ENG. APP.
Ø		ORIGINAL RELEASE	5/13/66	Ø			

TOLERANCES — ALL OTHERS: DEC. DIM. ± .005; FRAC. DIM. ± 1/64; ANGULAR DIM. ±

SCALE: FULL SIZE

DRILL, PUNCH, COMMERCIAL STOCK SIZES AND MANUFACTURERS TOLERANCES ARE NOT INCLUDED.

S401-64 (KYAB-5634-4) ← FOR PURCHASING ONLY

MODEL	PROJECT NO.	ASS'Y. NO.	DATE
CK-2/50			5-12-66

USED ON

REQ.	ITEM	PART NO.	DESCRIPTION	SYMBOL

STOCK SIZE

MATERIAL | WEIGHT PER PC.

TYPE & TEMPER

HEAT TREAT. SPEC.

FINISH & SPEC. NO.

THE TECHNICAL MATERIEL CORP.
MAMARONECK. NEW YORK

MOTOR

DRAWN 5/12/66 | ELEC. DES. APP. | MECH. DES. APP. 5/13/66

CHECKED | FINAL APPROVAL

M0135 Ø

FORM — 109