LD-353 D

THE TECHNICAL MATERIEL CORPORATION
MAMARONECK NEW YORK

TOWER LIGHT ISOLATION TRANSFORMER
MODEL TLI-I

60 CYCLES 200 WATTS

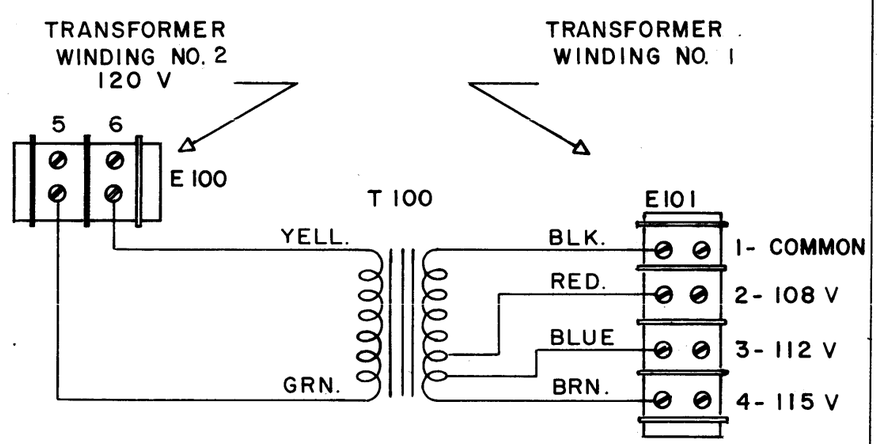

NOTE:

REMOVE SAFETY CHAIN FROM COVER WHEN OPERATING.

6

6

NOTICE TO PERSONS RECEIVING THIS DRAWING

THE TECHNICAL MATERIEL CORPORATION claims proprietary right in the material disclosed hereon. This drawing is issued in confidence for engineering information only and may not be reproduced or used to manufacture anything shown hereon without permission from THE TECHNICAL MATERIEL CORPORATION to the user. This drawing is loaned for mutual assistance and is subject to recall at any time.

Property of:

THE TECHNICAL MATERIEL CORPORATION
MAMARONECK, NEW YORK

NOTE:
1- PRINTED DIRECTLY ON FACE OF PLASTIC
2- MATERIAL:
POLISHED WHITE OPAQUE VINYL PLASTIC

ISSUE	ITEM	CHANGED FROM	DATE	CH. NO.	DRAFTS	CHECKER	ENG. APP.
D	2	FINISH DELETED	2-1-63	8168			
	1	MATERIAL CLARIFIED					
C	2	FINISH & NOTE ADDED	7-18-62	6925			
	1	MATL WAS VINYL PLASTIC					
B	2	E101 WAS To Ac Line on Sec. E100 WAS To Light on Prim.	12/26/57	2			A.J.J.
A	1	COLORS ADDED - 120V WAS 115 V	11/15/57	1			

TOLERANCES
DEC. DIM. ±
FRAC. DIM. ±
ANGULAR DIM. ±

SCALE:

MAXIMUM ALLOWABLE TOLERANCES HAVE BEEN DETERMINED AND ANY DEVIATIONS WILL BE CAUSE FOR REJECTION.
REMOVE ALL BURRS AND SHARP EDGES

REQ. PER UNIT	MODEL	PROJECT NO.	ASS'Y. NO.	DATE
1	TLI-1	652	A-1484	6-15-57

USED ON

REQ.	ITEM	PART NO.	DESCRIPTION	SYMBOL
		.015	THE TECHNICAL MATERIEL CORP. MAMARONECK. NEW YORK	
		STOCK SIZE		
		SEE NOTE #2	SCHEMATIC DIAGRAM	
		MATERIAL	MODEL TLI-1	

TYPE & TEMPER | HEAT TREAT. SPEC. | DRAWN | CHECKED | FINAL APPROVAL

FINISH & SPEC. NO. | ELEC. DES. APP. | MECH. DES. APP.

LD-353 D

FRM - 109 - A