REQ. PER UNIT	USED ON MODEL	ASS'Y. NO.	DATE	LD-1425	O
4	MAF-1		2-14-64		

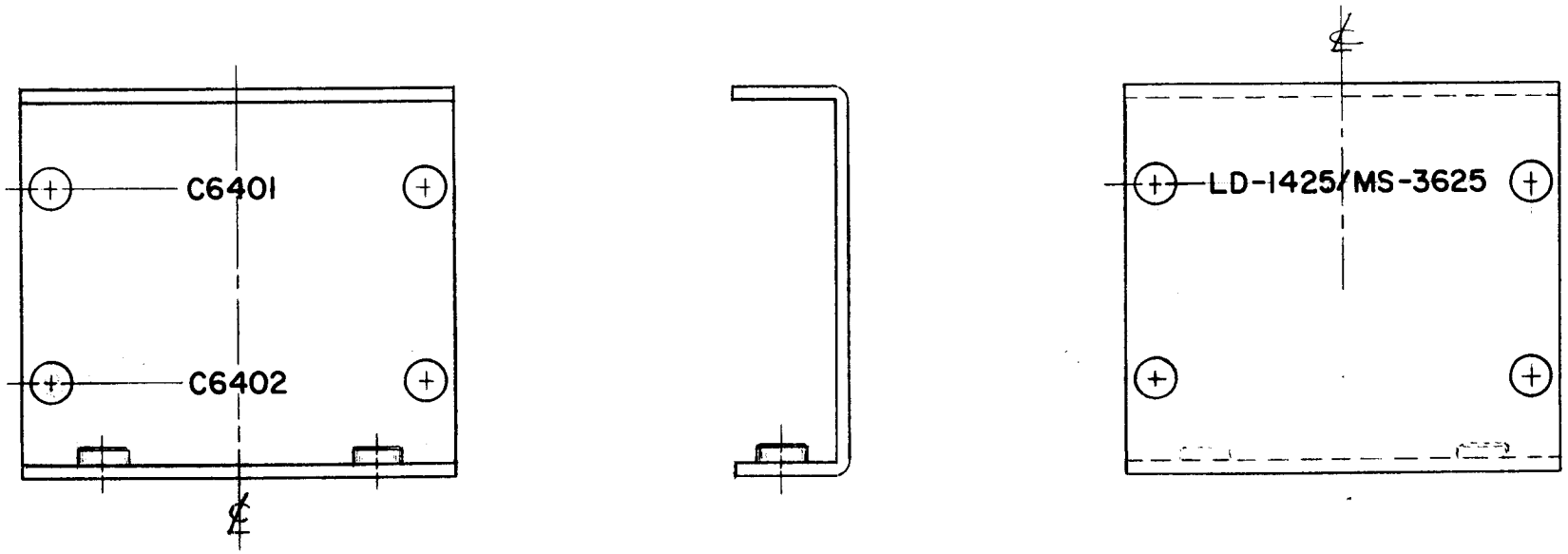

MARKING PROCESS: AS PER TMC SPECIFICATION S-727.

LETTERING: 1/8 HIGH BLACK GOTHIC, LOCATED AS SHOWN.

REF: MS-3625

SYM	DESCRIPTION	DATE	CH. NO.	DRAFTS	CHECKER	ENG. APP.
O	ORIG. RELEASE FOR PROD.	4-24-64		A.M.	@	
X1	ORIGINAL LOST REDRAWN	2-14-64		T.R.		

UNLESS OTHERWISE SPECIFIED
DIMENSIONS ARE IN INCHES AND INCLUDE
CHEMICALLY APPLIED OR PLATED FINISHES

SCALE 1:1

TOLERANCES
DECIMALS: .X ±.05, .XX ±.01, .XXX ±.005
FRACTIONS ± 1/64
ANGLES ± 0° 30′

CODE A

REQ.	ITEM	PART NO.	DESCRIPTION	SYMBOL
			Aaltonen	

STOCK SIZE: //

MATERIAL: //

TYPE & TEMPER: // HEAT TREAT. SPEC.: //

FINISH & SPEC. NO.: //

THE TECHNICAL MATERIEL CORP.
MAMARONECK. NEW YORK

MARKING, BRACKET, MOUNTING

DRAWN	CHECKED	FINAL APPROVAL
T. Ramirez		

ELEC. DES. APP. | MECH. DES. APP.

LD-1425 O

TMC FORM 108-A

STOCK NO. 440H