LD-1315 A

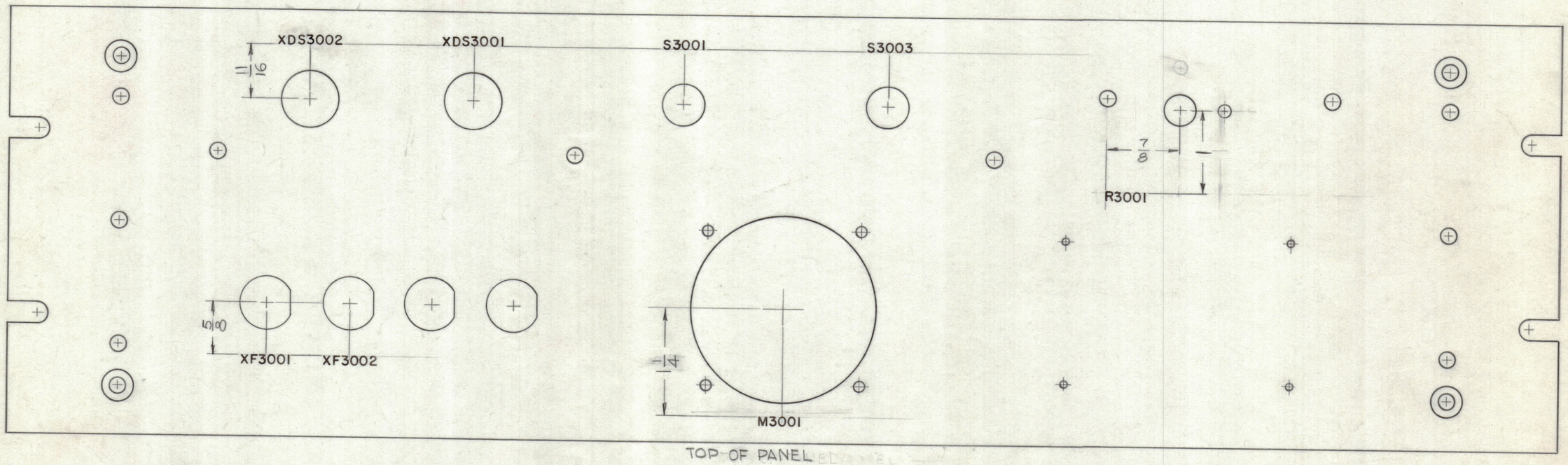

TOP OF PANEL

REAR OF PANEL SHOWN

-NOTES-

MARKING PROCESS: AS PER TMC SPECIFICATION 5-727

LETTERING : 1/8 HIGH, BLACK GOTHIC LOCATED AS SHOWN

REF: MS-3366(8)

SYM	ZONE	DESCRIPTION	DATE	CH. NO.	DRAFTS	CHECKER	ENG. APP.
A	—	SEE SHEET 1 OF 2	9-26-63	10,022	G.D.L		

UNLESS OTHERWISE SPECIFIED:
DIMENSIONS ARE IN INCHES
TOLERANCES ON
FRACTIONS ± 1/64 DECIMALS ± .005 ANGLES ± 1/2°

SCALE FULL

MAXIMUM ALLOWABLE TOLERANCES HAVE BEEN DETERMINED AND ANY DEVIATIONS WILL BE CAUSE FOR REJECTION.
REMOVE ALL BURRS & SHARP EDGES

REQ. PER UNIT	MODEL	SECTION	ASS'Y. NO.	DATE
1	LFA-4			5-1-63

USED ON

REQ.	ITEM	PART NO.	DESCRIPTION	SYMBOL

STOCK SIZE

MATERIAL

TYPE & TEMPER | HEAT TREAT. SPEC.

FINISH & SPEC. NO.

O. POSE

THE TECHNICAL MATERIEL CORP.
MAMARONECK, NEW YORK

LETTERING, BACK OF FRONT PANEL

DRAWN	CHECKED	FINAL APPROVAL
	9/4/63	TFH 6-11-63

ELEC. DES. APP.	MECH. DES. APP.	SHEET 2 OF 2	A
		LD-1315	

TMC FORM NO. 110

DEFIANCE NO. 1020 36952