STANDARD DRAWING

THE CONTENTS OF THIS DRAWING ARE THE EXCLUSIVE PROPERTY OF THE TECHNICAL MATERIEL CORP. ITS UNAUTHORIZED USE OR REPRODUCTION IN WHOLE OR IN PART IS STRICTLY FORBIDDEN.

Ø

JJ 342

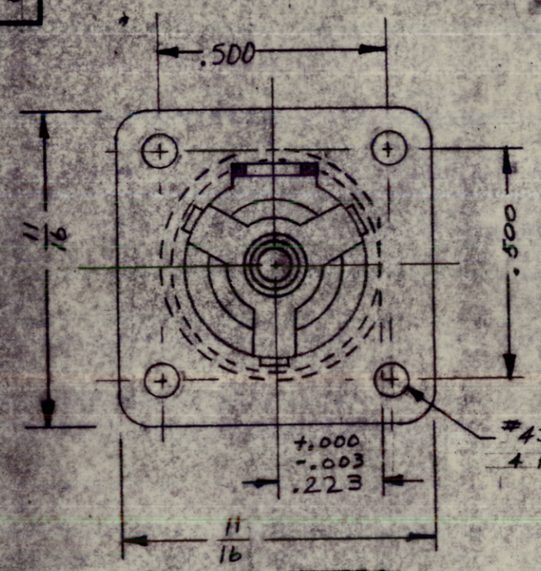

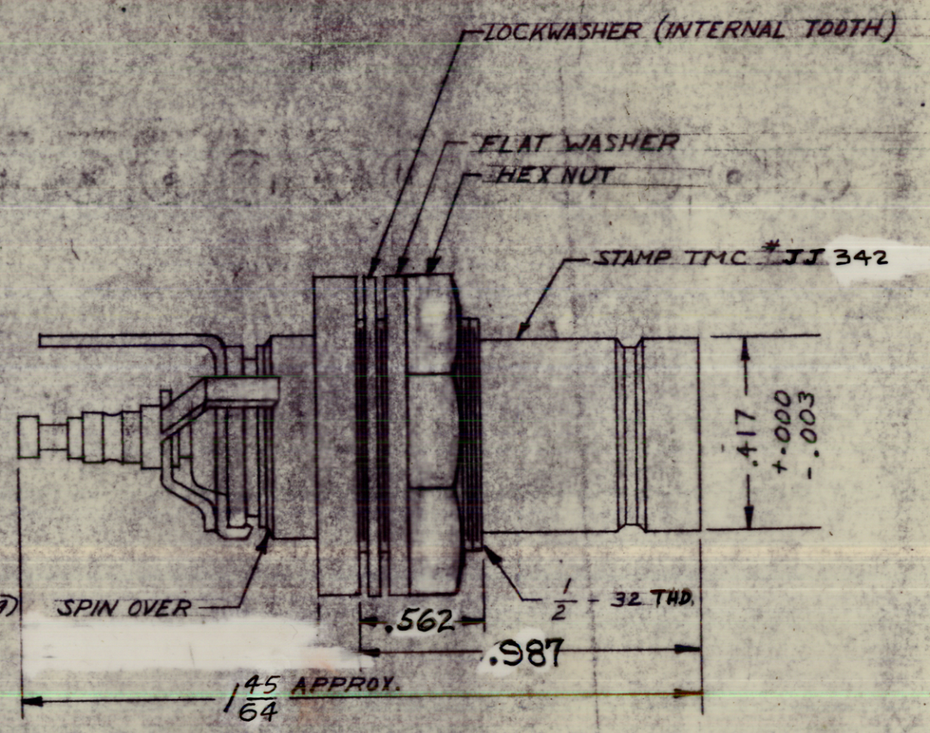

NOTE:
1. UPON ENGAGEMENT OF MATING CONNECTOR THE INSULATOR ASSEMBLY MOVES BACK 0.085
2. CONNECTOR TO BE SUPPLIED WITH PLASTIC CAP MOUNTED, AND HARDWARE BULK PACKED.

ASSIGNED PATENT No. 2,767,267

SPECIFICATIONS

SERIES – QDM-70
NO. OF CONTACTS – ONE (1)
TYPE OF CONTACTS – SWITCH TYPE
DIELECTRIC – TEFLON

ELECTRICAL DATA

MAX PEAK VOLTAGE – 500 V
FREQ. LIMIT – 10,000
NOM. IMPEDANCE – 70 OHMS

MATING ACCOMMODATIONS

TYPE – QDM – PL 255
MAX. O.D. –
IMPEDANCE – 70 OHMS

MATERIAL

EXTERNAL PARTS – BRASS
CONTACTS – BERYLLIUM COPPER

FINISH

EXTERNAL PARTS – SILVER PLATE & RHODIUM FLASH
CONTACTS – SILVER PLATE & GOLD FLASH

SYM	DESCRIPTION	DATE	CH. NO.	DRAFTS	CHECKER	ENG. APP.
Ø	ORIGINAL RELEASE FOR PROD.	2-5-68	Ø	R.G.		

UNLESS OTHERWISE SPECIFIED:
DIMENSIONS ARE IN INCHES
TOLERANCES ON
FRACTIONS ± 1/64 DECIMALS ± .005 ANGLES ± 1/2°

SCALE: 5401-70 (3951)

MAXIMUM ALLOWABLE TOLERANCES HAVE BEEN DETERMINED AND ANY DEVIATIONS WILL BE CAUSE FOR REJECTION. REMOVE ALL BURRS AND SHARP EDGES

REQ. PER UNIT	MODEL	SECTION	ASS'Y. NO.	DATE

USED ON

REQ.	ITEM	PART NO.	DESCRIPTION	SYMBOL

STOCK SIZE: SEE NOTE
MATERIAL:
TYPE & TEMPER:
HEAT TREAT. SPEC.:
FINISH & SPEC. NO.: SEE NOTE

THE TECHNICAL MATERIEL CORP.
MAMARONECK, NEW YORK

CONNECTOR, RECEPTACLE, ELECTRICAL

DRAWN: JA
CHECKED:
FINAL APPROVAL:
ELEC. DES. APP.:
MECH. DES. APP.:

JJ-342 Ø

TMC FORM NO. 106

DEFIANCE NO. 1020 38645