REQ. PER UNIT	USED ON			
	MODEL	ASS'Y. NO.	DATE	JJ-306
			12-27-63	

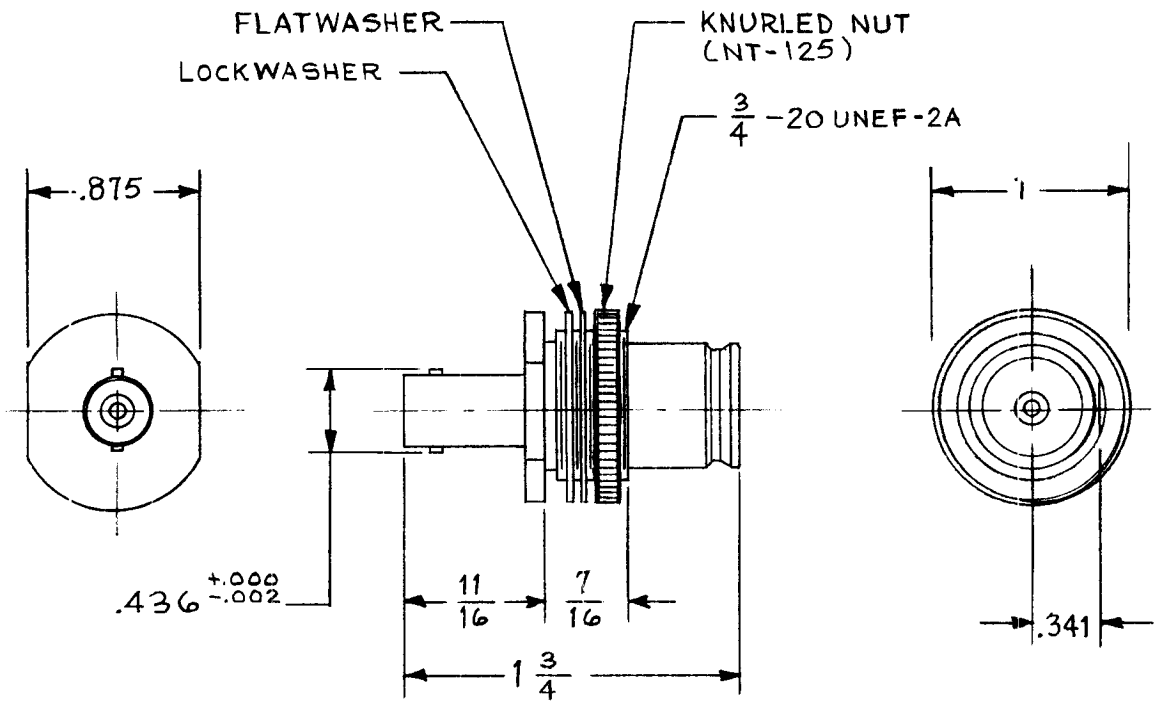

SPECIFICATIONS:
SERIES - QDS
NO. OF CONTACTS - 1
TYPE OF CONTACT - FEMALE
DIELECTRIC - TEFLON

ELECTRICAL DATA:
MAX. PEAK OPR. VOLT - 500 V
FREQ. LIMIT - 10,000 MC
NOMINAL IMPEDANCE - 50 OHMS

MATING ACCOMMODATIONS:
TYPE - QDS(F) TO BNC(F)

MATERIAL:
EXTERNAL PARTS - BRASS
CONTACT - BERYLLIUM COPPER

FINISH:
EXTERNAL PARTS - SILVER PLATE
RHODIUM FLASH

CONTACT - SILVER PLATE
GOLD FLASH

PANEL:
MAX. THICKNESS - 3/16

SYM	DESCRIPTION	DATE	CH. NO.	DRAFTS	CHECKER	ENG. APP.

UNLESS OTHERWISE SPECIFIED
DIMENSIONS ARE IN INCHES AND INCLUDE
CHEMICALLY APPLIED OR PLATED FINISHES

DECIMALS .X ±.05 .XX ± .01 .XXX ± .005 — TOLERANCES — FRACTIONS ± 1/64 ANGLES ± 0° 30'

SCALE: FULL SCALE

CODE: S401-70 (2970)

REQ.	ITEM	PART NO.	MARTINENGO DESCRIPTION	SYMBOL

STOCK SIZE: SEE NOTE

MATERIAL: TYPE & TEMPER: SEE NOTE — HEAT TREAT. SPEC.

FINISH & SPEC. NO.

THE TECHNICAL MATERIEL CORP.
MAMARONECK, NEW YORK

ADAPTER, CONNECTOR, RECEPTACLE
QDS TO BNC

DRAWN	CHECKED	FINAL APPROVAL
M. TANTILLO 12-27-63	12/27/63	BP

ELEC. DES. APP. — MECH. DES. APP. — JJ-306

TMC FORM 108-A — STOCK NO. 440H