REQ. PER UNIT	USED ON			JJ-298
	MODEL	ASS'Y. NO.	DATE	
	QDP-4C2X4		9-18-63	

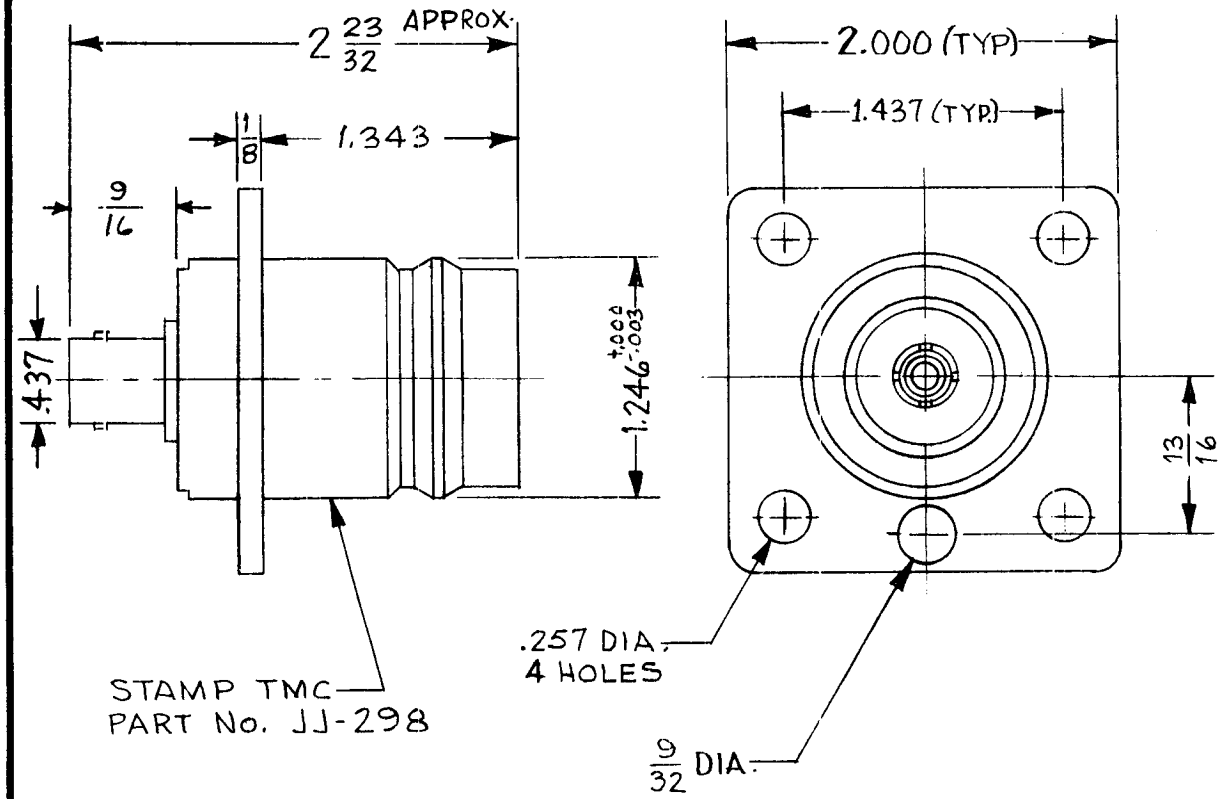

SPECIFICATIONS:
Series - BNC
No. of Contacts - One (1)
Type of Contact - Female
Dielectric - Teflon

ELECTRICAL DATA:
Max. Peak Opr. Volt - 500 V
Freq. Limit - 10,000 MCS
Nominal Impedance - 50Ω

CABLE ACCOMMODATIONS:
Type - None

MATERIAL:
External Parts - Brass
Contact - Beryllium Copper

FINISH:
External Parts - Silver Plate & Rhodium Flash
Contact - Silver Plate & Gold Flash

PANEL:
Max. Thickness - 3/16

MATING ACCOMMODATIONS:
Type - QDL

SYM	DESCRIPTION	DATE	CH. NO.	DRAFTS	CHECKER	ENG. APP.

UNLESS OTHERWISE SPECIFIED DIMENSIONS ARE IN INCHES AND INCLUDE CHEMICALLY APPLIED OR PLATED FINISHES

SCALE

TOLERANCES: DECIMALS .X ±.05, .XX ± .01, .XXX ±.005; FRACTIONS ± 1/64; ANGLES ± 0° 30'

CODE: S401-70-2965

REQ.	ITEM	PART NO.	DESCRIPTION	SYMBOL

STOCK SIZE

MATERIAL

TYPE & TEMPER | HEAT TREAT. SPEC.

FINISH & SPEC. NO.

MARTINENGO

THE TECHNICAL MATERIEL CORP.
MAMARONECK, NEW YORK

ADAPTER, CONNECTOR
QDL(F) TO BNC (F)

DRAWN	CHECKED	FINAL APPROVAL
M TANTILLO 9-18-63	9/23/63	BP

ELEC. DES. APP. | MECH. DES. APP. 9/23/63

JJ-298

TMC FORM 108-A

STOCK NO. 440H