THE CONTENTS OF THIS DRAWING ARE THE EXCLUSIVE PROPERTY OF THE TECHNICAL MATERIEL CORP. ITS UNAUTHORIZED USE FOR REPRODUCTION IN WHOLE OR IN PART IS STRICTLY FORBIDDEN.

REQ. PER UNIT	USED ON MODEL	ASS'Y. NO.	DATE	
			6-18-63	JJ-289

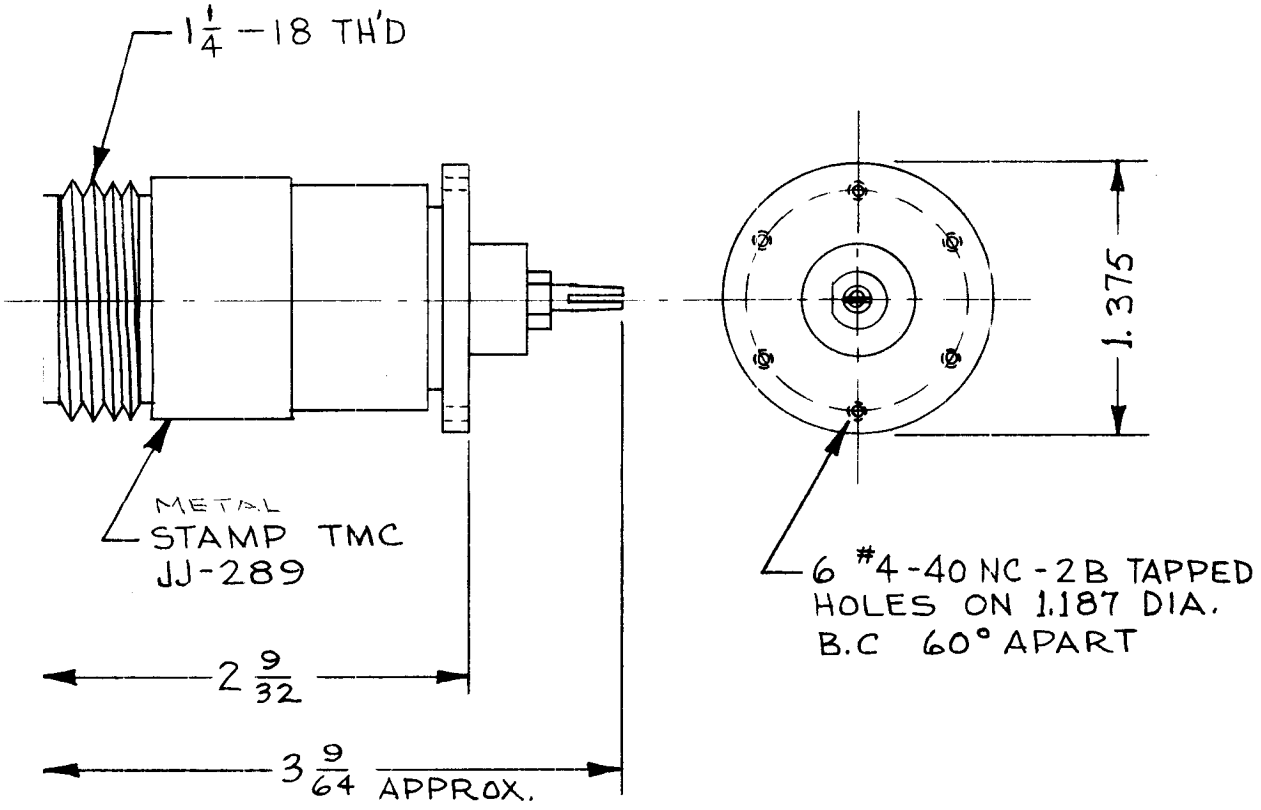

SPECIFICATIONS:
- Series - LC (10)
- No. of Contacts - One (1)
- Type of Contact - Female
- Dielectric - Teflon

ELECTRICAL DATA:
- Max. Peak Opr. Volt - 10,000 V.
- Nominal Impedance - 50 Ohms

MATING ACCOMMODATIONS:
- Type - TCA-85/LC(10)

MATERIAL:
- External Parts - Brass
- Contact - Beryllium Copper

FINISH:
- External Parts - Silver Plate and Rhodium Flash
- Contact - Silver Plate and Gold Flash

SYM	DESCRIPTION	DATE	CH. NO.	DRAFTS	CHECKER	ENG. APP.

UNLESS OTHERWISE SPECIFIED DIMENSIONS ARE IN INCHES AND INCLUDE CHEMICALLY APPLIED OR PLATED FINISHES

TOLERANCES: DECIMALS .X ±.05, .XX ± .01, .XXX ± .005; FRACTIONS ± 1/64; ANGLES ± 0° 30'

SCALE: NONE

CODE: S401-70-2956

REQ.	ITEM	PART NO.	DESCRIPTION	SYMBOL

STOCK SIZE

MATERIAL

TYPE & TEMPER | HEAT TREAT. SPEC.

FINISH & SPEC. NO.

THE TECHNICAL MATERIEL CORP.
MAMARONECK, NEW YORK

CONNECTOR, RECEPTACLE
LC (10)

DRAWN	CHECKED	FINAL APPROVAL
M.J. TANTILLO 6-18-63	6/18/63	TFH 6·18·63
ELEC. DES. APP.	MECH. DES. APP.	JJ-289