THE CONTENTS OF THIS DRAWING ARE THE EXCLUSIVE PROPERTY OF THE TECHNICAL MATERIEL CORP. ITS UNAUTHORIZED USE OR REPRODUCTION IN WHOLE OR IN PART IS STRICTLY FORBIDDEN.

REQ. PER UNIT	USED ON MODEL	ASS'Y. NO.	DATE	
	TCA-85/HN		9-6-62	JJ-207

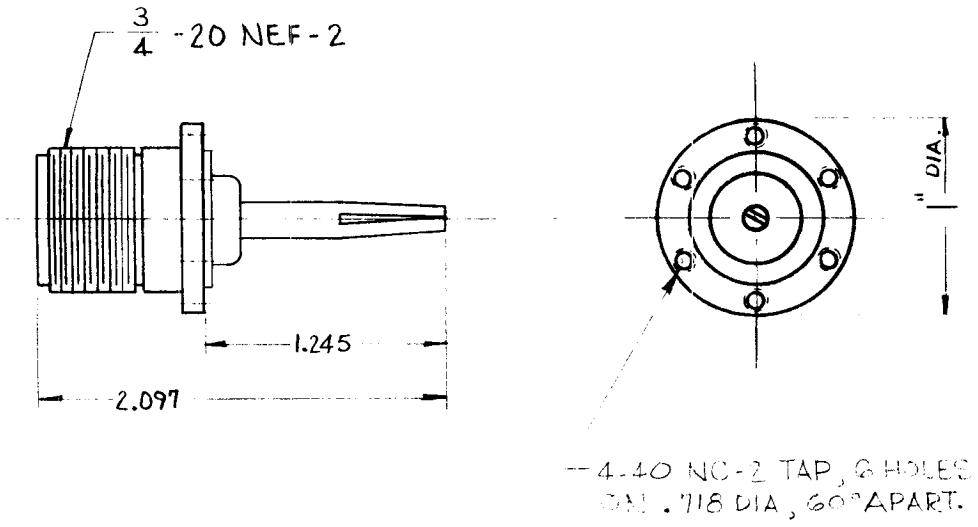

SPECIFICATIONS:
Series - HN
No. of Contacts - One (1)
Type of Contact - Female
Dielectric - Rexolite

ELECTRICAL DATA:
Max. Peak Opr. Volt -
Freq. Limit -
Nominal Impedance -

MATING ACCOMMODATIONS:
Type -

MATERIAL:
External Parts - Brass
Contact - Beryllium Copper
Gasket - None

FINISH:
External Parts - Silver Plate and Rhodium Flash
Contact - Silver Plate and Gold Flash

SYM	DESCRIPTION	DATE	CH. NO.	DRAFTS	CHECKER	ENG. APP.

UNLESS OTHERWISE SPECIFIED:
DIMENSIONS ARE IN INCHES
TOLERANCES ON
FRAC. ± 1/64 DEC. ± .005 ANGLES ± 1/2°

SCALE: 540-710 (1009)

MAXIMUM ALLOWABLE TOLERANCES HAVE BEEN DETERMINED AND ANY DEVIATIONS WILL BE CAUSE FOR REJECTION. REMOVE ALL BURRS AND SHARP EDGES

REQ.	ITEM	PART NO.	DESCRIPTION	SYMBOL

STOCK SIZE

MATERIAL

TYPE & TEMPER | HEAT TREAT. SPEC.

FINISH & SPEC. NO.

A. MARTINENGO

THE TECHNICAL MATERIEL CORP.
MAMARONECK, NEW YORK

RECEPTACLE, CONNECTOR
"HN" SERIES

DRAWN	CHECKED	FINAL APPROVAL
G. Sencer 9-6-62		BP
ELEC. DES. APP.	MECH. DES. APP.	JJ-207

TMC FORM NO. 108-A

DEFIANCE NO. 1020 36645