STANDARD DRAWING

REQ. PER UNIT	USED ON MODEL	ASS'Y. NO.	DATE	JJ-182	A
	GPT-10K				

SPECIFICATIONS

1. QUANTITY OF CONTACTS: 2
2. QUANTITY OF CONNECTOR MATING ENDS:
3. CONTACT DATA
   - A. QUANTITY OF IDENTICAL CONTACTS: 2
   - B. TYPE: FEMALE
   - C. STYLE: BLADE
   - D. CURRENT RATING: 10A @ 250V, 15A @ 125V
   - E. ACWV: 125V, 250V
   - F. CONNECTED TO SHELL: NO
   - G. WIRED FOR EXT. GRD.: NO
   - H. MATERIAL: BRASS
4. DIELECTRIC: BROWN BAKELITE
5. SHELL DATA
   - A. ENCLOSING: PARTIALLY ENCLOSED
   - B. MATERIAL: BRASS
   - C. FINISH: NICKEL PLATE
   - D. CORROSION RESISTANT: YES
6. POLARIZATION: CONTACT SHAPE
7. LOCKING DATA
   - A. TYPE: TWIST LOCK
8. CABLE DATA
   - A. WIRE ACCOMMODATED: #14 MAXIMUM
   - B. CABLE CLAMP: NONE
9. MATES WITH: PL171

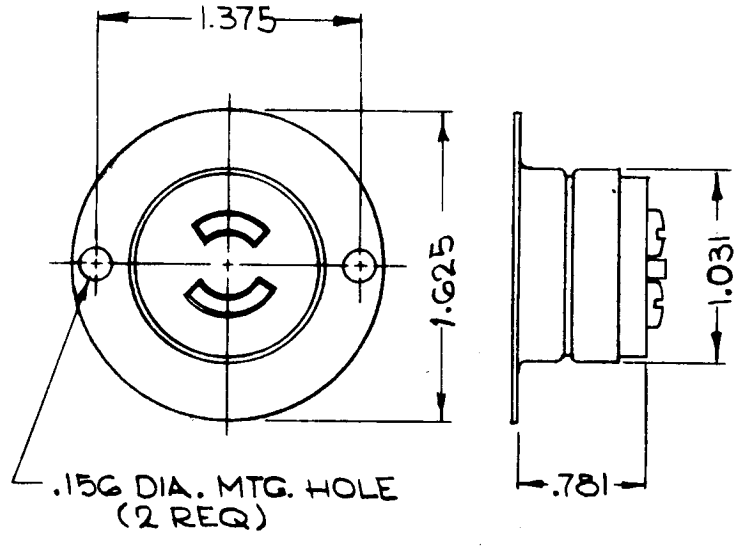

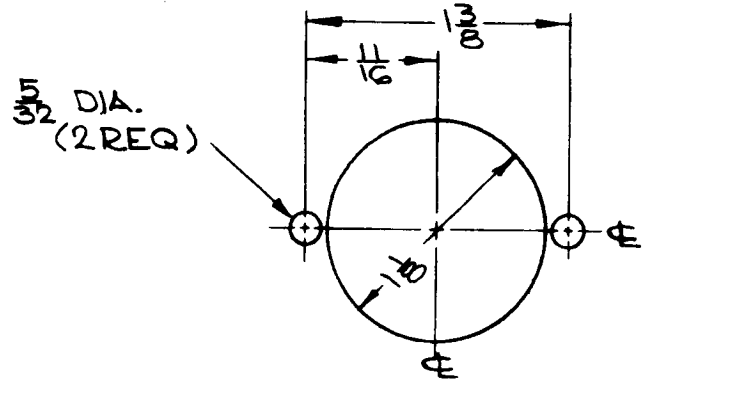

— MOUNTING DETAIL —

SYM	DESCRIPTION	DATE	CH. NO.	DRAFTS	CHECKER	ENG. APP.
A	REVISED & UPDATED	12/18/63	10601	[illegible]	[illegible]	[illegible]

REQ.	ITEM	PART NO.	DESCRIPTION	SYMBOL
			POSE	

STOCK SIZE

MATERIAL

TYPE & TEMPER | HEAT TREAT. SPEC.

FINISH & SPEC. NO.

THE TECHNICAL MATERIEL CORP.
MAMARONECK. NEW YORK

CONNECTOR, RECEPTACLE, ELECTRICAL
TWIST LOCK TYPE (FEMALE)

DRAWN	CHECKED	FINAL APPROVAL
[illegible] 11-8-63	[illegible] 11-9-63	[illegible]

ELEC. DES. APP.	MECH. DES. APP.		
JC 11/11/63	[illegible]	JJ-182	A

UNLESS OTHERWISE SPECIFIED
DIMENSIONS ARE IN INCHES AND INCLUDE
CHEMICALLY APPLIED OR PLATED FINISHES

SCALE: DO NOT SCALE

TOLERANCES
DECIMALS: .X ± .05, .XX ± .01, .XXX ± .005
FRACTIONS: ± 1/64
ANGLES: ± 0° 30'

CODE: C

S401-43 (7468)

TMC FORM 108-A

STANDARD DRAWING

STOCK NO. 440H