REQ. PER. UNIT	USED ON			IN-1134 SH 2 OF 6	Ø
	MODEL	ASS'Y. N.	DATE		

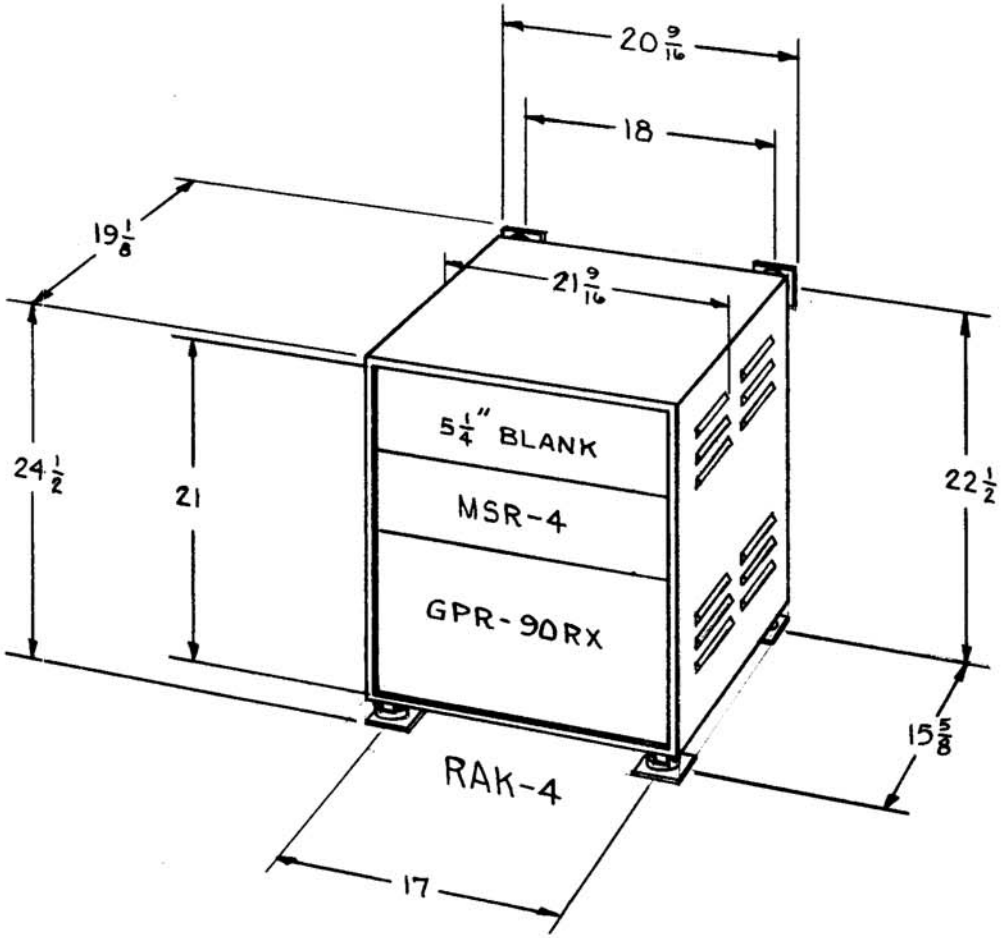

SO No. X-9552

ISSUE	ITEM	CHANGED FROM	DATE	CH. NO.	DRAFTS	CHECKER	ENG. APP.
Ø		ORIGINAL RELEASE	7/6/69		a		

REQ.	ITEM	PART NO.	DESCRIPTION	SYMBOL

STOCK SIZE

MATERIAL

TYPE & TEMPER | HEAT TREAT. SPEC.

FINISH & SPEC. NO.

THE TECHNICAL MATERIEL CORP.
MAMARONECK, NEW YORK

SSB RECEIVING SYSTEM FOR
TELESCO INTERNATIONAL CORP

DRAWN	CHECKED	FINAL APPROVAL
MJT 1-13-60		SAM 7/6/69

ELEC. DES. APP | MECH. DES. APP

IN-1134 SH2 OF 6 Ø

TOLERANCES

DEC. DIM. ±
FRAC. DIM. ±
ANGULAR DIM. ±

SCALE:

MAXIMUM ALLOWABLE TOLERANCES HAVE BEEN DETERMINED AND ANY DEVIATIONS WILL BE CAUSE FOR REJECTION. REMOVE ALL BURRS AND SHARP EDGES

FORM 108-A