REQ. PER UNIT	USED ON			IN-1041	Ø
	MODEL	ASS'Y. NO.	DATE		

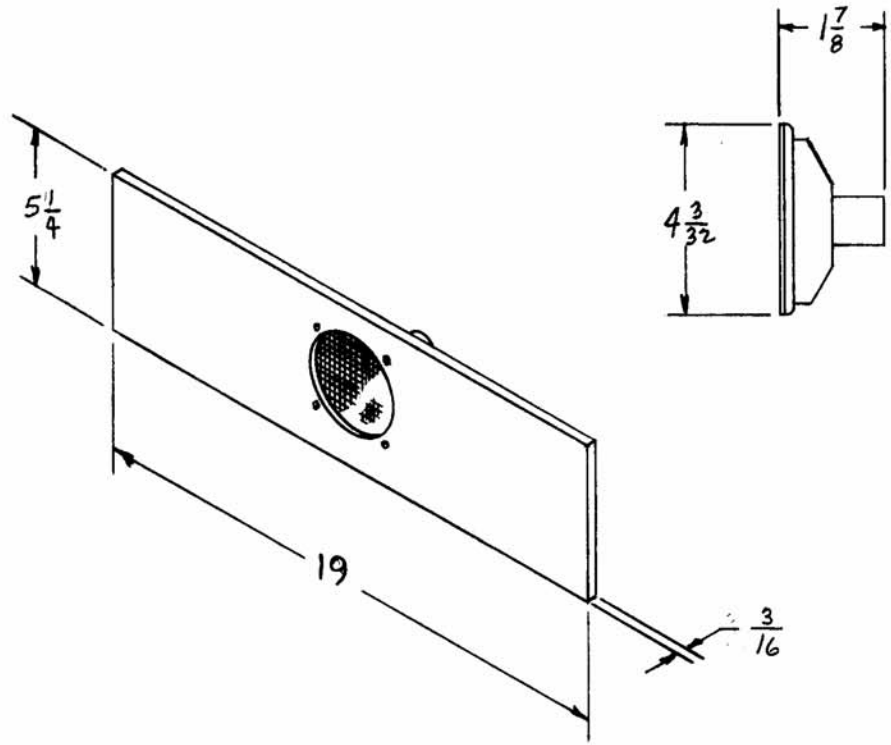

ISSUE	ITEM	CHANGED FROM	DATE	CH. NO.	DRAFTS	CHECKER	ENG. APP.
Ø		ORIGINAL RELEASE	[illegible]		[illegible]		

TOLERANCES

DEC. DIM. ±
FRAC. DIM. ±
ANGULAR DIM. ±

SCALE:

MAXIMUM ALLOWABLE TOLERANCES HAVE BEEN DETERMINED AND ANY DEVIATIONS WILL BE CAUSE FOR REJECTION.
REMOVE ALL BURRS AND SHARP EDGES

REQ.	ITEM	PART NO.	DESCRIPTION	SYMBOL

STOCK SIZE

MATERIAL

TYPE & TEMPER | HEAT TREAT. SPEC.

FINISH & SPEC. NO.

THE TECHNICAL MATERIEL CORP.
MAMARONECK. NEW YORK

DIMENSIONAL OUTLINE DRAWING

MODEL LSP-4

DRAWN	CHECKED	FINAL APPROVAL
MJT 11-12-58		[illegible]

ELEC. DES. APP.	MECH. DES. APP.	IN-1041	Ø

FORM 108-A