STANDARD DRAWING

TMC PART NO.	FOR USE WITH CASE SIZE	FIGURE
IM226-1	TO-6, TO-36	1
IM226-2	TO-3, TO-27, TO-41	2
IM226-3	MD-14	3
IM226-4	TO-3	4

SYM.	MATERIAL & FINISH
C	0.065 THK. ALUMINUM ALLOY, GOLD IRIDITE. BLACK DIELECTRIC FINISH (ONE SIDE) 0.2°C / WATT
M	0.001 - 0.003 THK. CLEAR MICA
B	BERYLLIUM OXIDE 0.062 THICK
A	.020 ALUMINUM ALLOY 7075-T4 OR T6 HARD ANODIZED .001 THICK BOTH SIDES

REQ. PER UNIT	USED ON MODEL	ASS'Y. NO.	DATE
	STANDARD		5-28-64

IM226 E

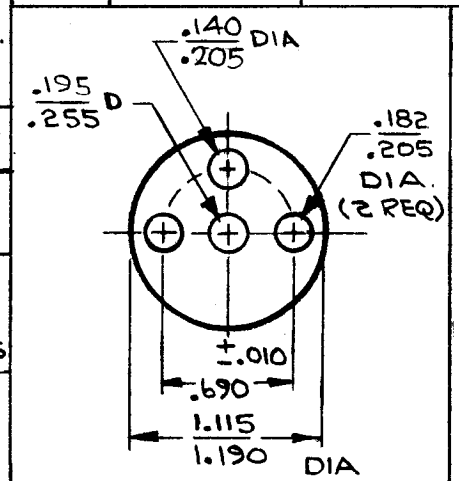

FIGURE-1

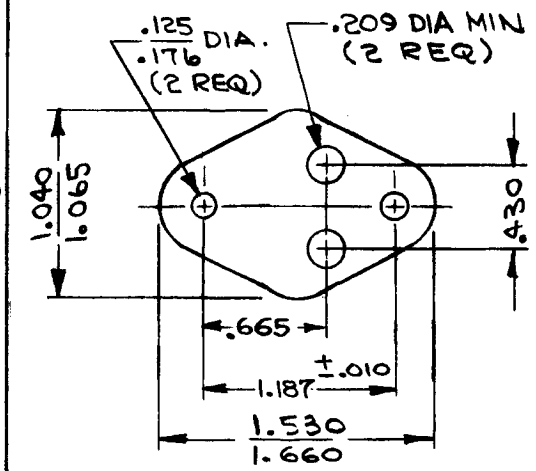

FIGURE-2

FIGURE-4

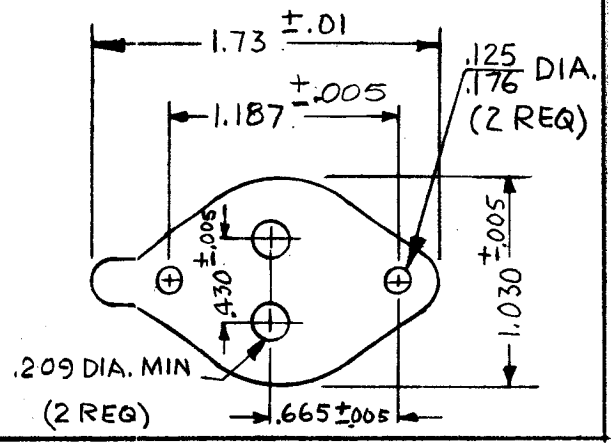

TMC PART NO TO BE IN THE FOLLOWING FORM:

IM226 - 1 C

TMC PART NO | STYLE | MATERIAL

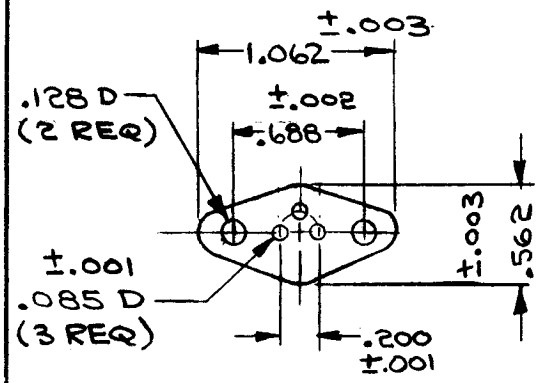

FIGURE-3

(AVAILABLE IN MATERIAL "M" ONLY)

SYM	DESCRIPTION	DATE	CH. NO.	DRAFTS	CHECKER	ENG. APP.
E	ADDED FIG. 4	11-28-67	18630	HG.	[signature]	OP [signature]
D	ADD. SYM "A"; FIG. 2 DIM. CHG.	4-4-67	18035	HCR	[signature]	[signature]
C	SYM. "B" ADDED TO MAT'L & FINISH CHART, FIG 1: .140/.205 WAS .195/.155	11-10-65	15170	JC	[signature]	JC
B	ON FIG. 2 .665 WAS .655 ON P/N EXAMPLE IM226 WAS IM266	11.3.64	12811	WB	[signature]	JC
A	MAT'L & FINISH COLUMN REV.	8.6.64	12027	WB	@	JC
O	ORIGINAL RELEASE FOR PRODUCTION	6/1/64	O	A.M.	@	JC
X	EXPERIMENTAL RELEASE	5-28-64	X	A.M.		

UNLESS OTHERWISE SPECIFIED DIMENSIONS ARE IN INCHES AND INCLUDE CHEMICALLY APPLIED OR PLATED FINISHES

DECIMALS — TOLERANCES — FRACTIONS ± 1/64 ANGLES ± 0° 30'

SCALE —//—

CODE C

S401-408 (MAT'L "B")
S401-285
S401-105
S401-40 (FIG. 3)

REQ.	ITEM	PART NO.	DESCRIPTION	SYMBOL
		—//—	CAMARDA/DEWEY	

STOCK SIZE: SEE CHART

MATERIAL: —//— | —//—

TYPE & TEMPER | HEAT TREAT. SPEC.

SEE CHART

FINISH & SPEC. NO.

THE TECHNICAL MATERIEL CORP.
MAMARONECK. NEW YORK

INSULATOR, SEMI CONDUCTOR

DRAWN	CHECKED	FINAL APPROVAL
A. MARINO	@	[signature]

ELEC. DES. APP. | MECH. DES. APP. | JC 6-1-64

IM226 E

TMC FORM 108-A

REPROVEL NO. 440H 16106