REQ. PER UNIT	USED ON MODEL	ASS'Y. NO.	DATE		
1	LPFA-1K		9-16-66	ID360	Ø

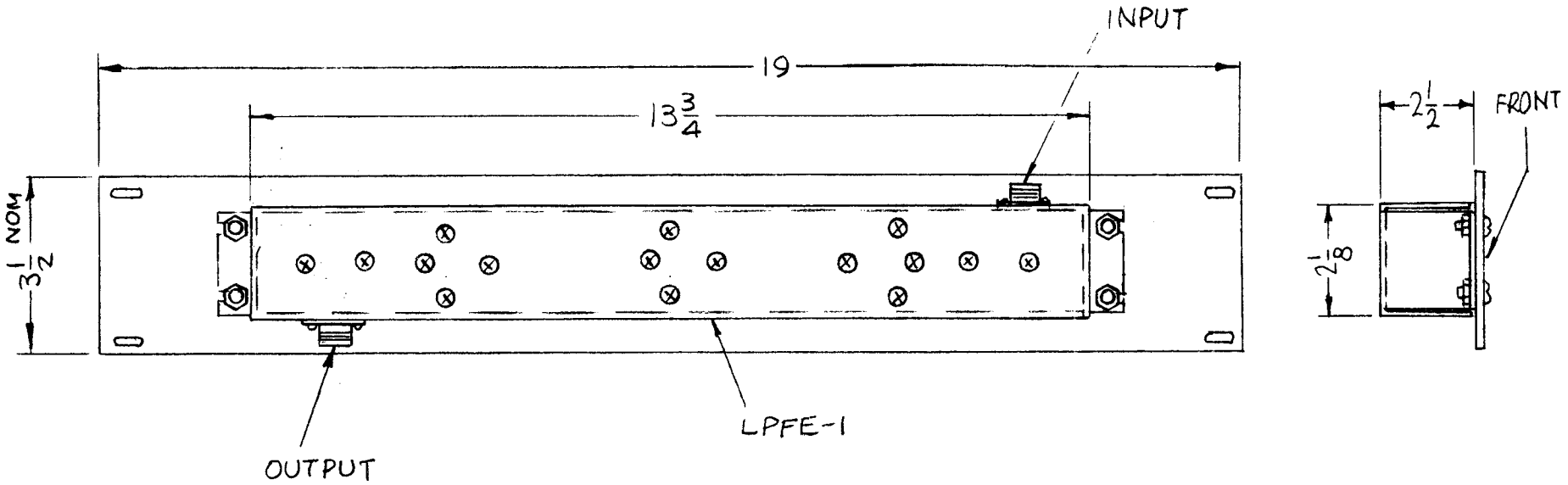

SYM	DESCRIPTION	DATE	CH. NO.	DRAFTS	CHECKER	ENG. APP.
Ø	ORIGINAL RELEASE FOR PRODUCTION	1/11/67	Ø	CV		
X	EXP RELEASE	9-16-66	X			

UNLESS OTHERWISE SPECIFIED
DIMENSIONS ARE IN INCHES AND INCLUDE
CHEMICALLY APPLIED OR PLATED FINISHES

SCALE

TOLERANCES
DECIMALS .X ±.05 .XX ± .01 .XXX ±.005
FRACTIONS ± 1/64
ANGLES ± 0° 30′

CODE

REQ.	ITEM	PART NO.	DESCRIPTION	SYMBOL

STOCK SIZE

MATERIAL

TYPE & TEMPER | HEAT TREAT. SPEC.

FINISH & SPEC. NO.

F. BUDETTI

THE TECHNICAL MATERIEL CORP.
MAMARONECK, NEW YORK

INSTALLATION DRAWING

DRAWN | CHECKED | FINAL APPROVAL

ELEC. DES. APP. | MECH. DES. APP.

ID360 Ø

TMC FORM 108-A

REPROVEL NO. 440H 23845