ID-226 Ø

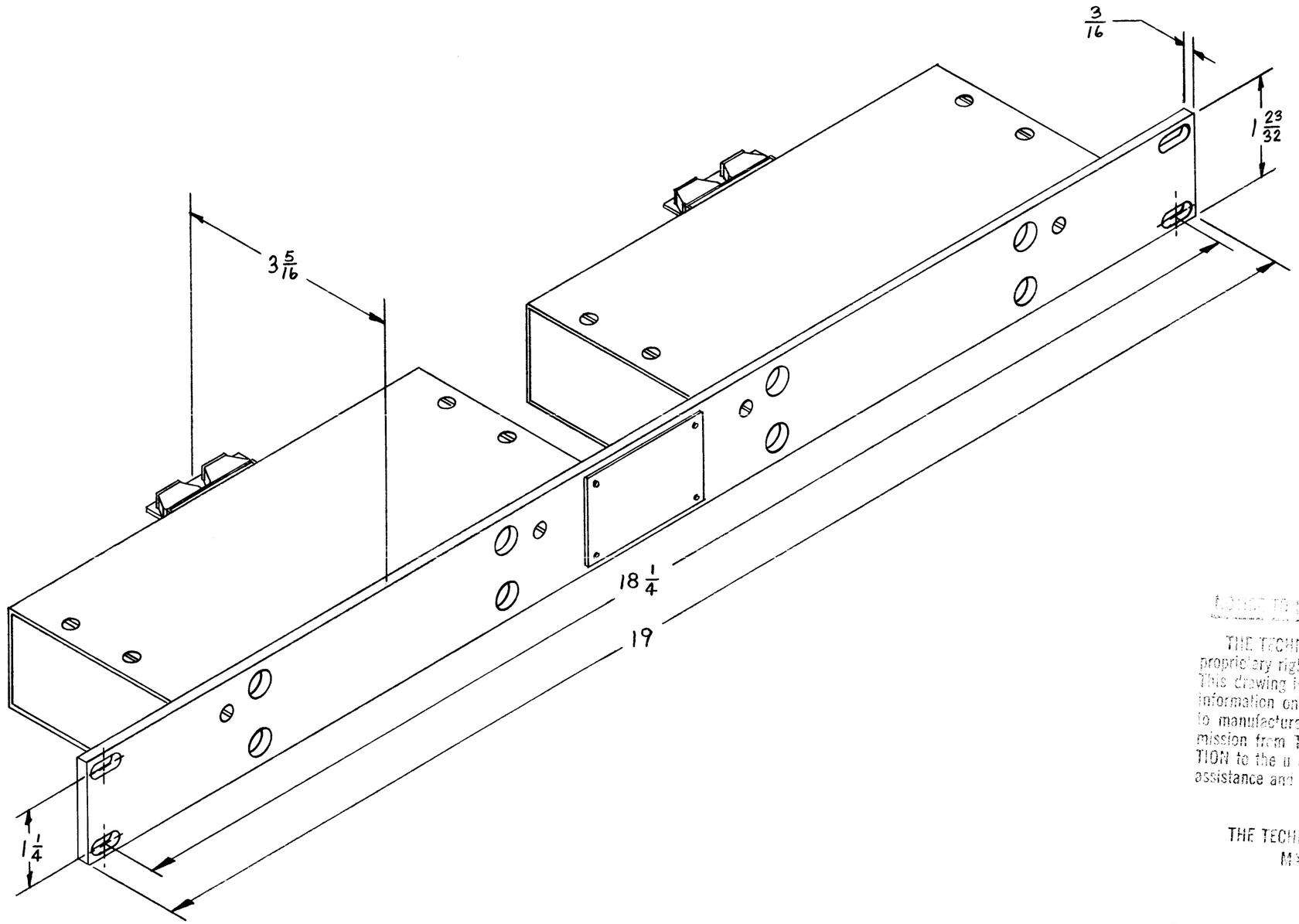

NOTICE TO PERSONS RECEIVING THIS DRAWING

THE TECHNICAL MATERIEL CORPORATION claims proprietary right in the material disclosed hereon. This drawing is issued in confidence for engineering information only and may not be reproduced or used to manufacture anything shown hereon without permission from THE TECHNICAL MATERIEL CORPORATION to the user. This drawing is loaned for mutual assistance and is subject to recall at any time.

Property of:

THE TECHNICAL MATERIEL CORPORATION
MAMARONECK, NEW YORK

ISSUE	ITEM	CHANGED FROM	DATE	CH. NO.	DRAFTS	CHECKER	ENG. APP.
Ø		ORIGINAL RELEASE	7/14/	Ø			

TOLERANCES	SCALE:
DEC. DIM. ± FRAC. DIM. ± ANGULAR DIM. ±	MAXIMUM ALLOWABLE TOLERANCES HAVE BEEN DETERMINED AND ANY DEVIATIONS WILL BE CAUSE FOR REJECTION. REMOVE ALL BURRS AND SHARP EDGES

REQ. PER UNIT	MODEL	PROJECT NO.	ASS'Y. NO.	DATE
USED ON				

REQ.	ITEM	PART NO.	DESCRIPTION	SYMBOL
STOCK SIZE			THE TECHNICAL MATERIEL CORP. MAMARONECK, NEW YORK	
MATERIAL			DIMENSIONAL OUTLINE PVC-2	
TYPE & TEMPER	HEAT TREAT. SPEC.		DRAWN: MJT 8-1-58 / CHECKED / FINAL APPROVAL: 8/12/62	
FINISH & SPEC. NO.			ELEC. DES. APP. / MECH. DES. APP.	ID-226 Ø

FORM-100-A