GR-198 | 0

THE CONTENTS OF THIS DRAWING ARE THE EXCLUSIVE PROPERTY OF THE TECHNICAL MATERIEL CORP. ITS UNAUTHORIZED USE OR REPRODUCTION IN WHOLE OR IN PART IS TRICTLY FORBIDDEN.

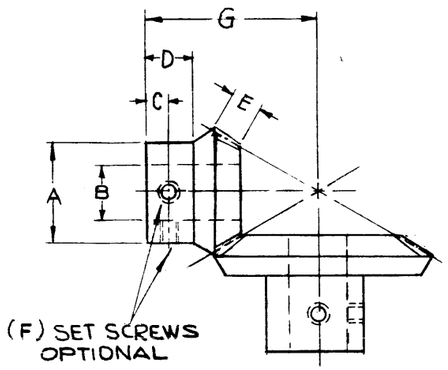

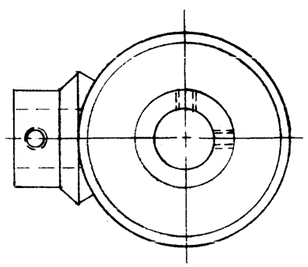

TMC NO.	MFG. NO.	A	B	C	D	E	F	G	P.D.	TEETH	PITCH	PRESS.∡	MATERIAL	FINISH
GR-198-1	L-148Y-G (MOD.)	5/8	3/8	—	1/2	.19	—	1-1/16	1.500	24	16	20°	STAINLESS STEEL, 303	S104-PASSIVATE
-2	L-148Y-P (MOD.)	21/32	3/8	—	9/32	.19	—	1-1/16	.750	12	16	20°	STAINLESS STEEL, 303	S104-PASSIVATE
-3	L-146Y-G (MOD.)	5/8	3/8	—	7/16	.25	—	1-1/16	1.500	24	16	20°	STAINLESS STEEL, 303	S104-PASSIVATE
-4	L-146Y-P (MOD.)	5/8	3/8	—	1/4	.25	—	1-1/16	1.000	16	16	20°	STAINLESS STEEL, 303	S104-PASSIVATE

SYM	DESCRIPTION	DATE	CH. NO.	DRAFTS	CHECKER	ENG. APP.
0	ORIGINAL RELEASE FOR PRODUCTION					

UNLESS OTHERWISE SPECIFIED: A

DIMENSIONS ARE IN INCHES

TOLERANCES ON

FRACTIONS ± 1/64 DECIMALS ± .005 ANGLES ± 1/2°

SCALE: S401-15

MAXIMUM ALLOWABLE TOLERANCES HAVE BEEN DETERMINED AND ANY DEVIATIONS WILL BE CAUSE FOR REJECTION. REMOVE ALL BURRS AND SHARP EDGES

REQ. PER UNIT	MODEL	SECTION	ASS'Y. NO.	DATE
				8-30-63

USED ON

REQ.	ITEM	PART NO.	F. BUDETTI DESCRIPTION	SYMBOL

STOCK SIZE

MATERIAL

TYPE & TEMPER | HEAT TREAT. SPEC.

FINISH & SPEC. NO.

THE TECHNICAL MATERIEL CORP.
MAMARONECK, NEW YORK

GEAR, BEVEL

DRAWN	CHECKED	FINAL APPROVAL
SRG	[signature]	[signature] 3-30-64

ELEC. DES. APP.	MECH. DES. APP.		
[signature]	[signature]	GR-198	0

FORM NO. 1 9

DEFIANCE N . 1020 36845