IF IT IS FOUND DESIRABLE TO CHANGE ANY TOLERANCE OR OTHER DETAIL SPECIFIED ON THIS DRAWING NOTIFY THE PURCHASER PROMPTLY.

MAXIMUM ALLOWABLE TOLERANCES HAVE BEEN DETERMINED AND DEVIATIONS WILL BE CAUSE FOR REJECTION. REMOVE ALL BURRS AND SHARP EDGES

GR-100 B.

USED ON

MODEL	PROJECT NO.	ASS'Y. NO.	DATE
XTR	116	—"—	7-1-52

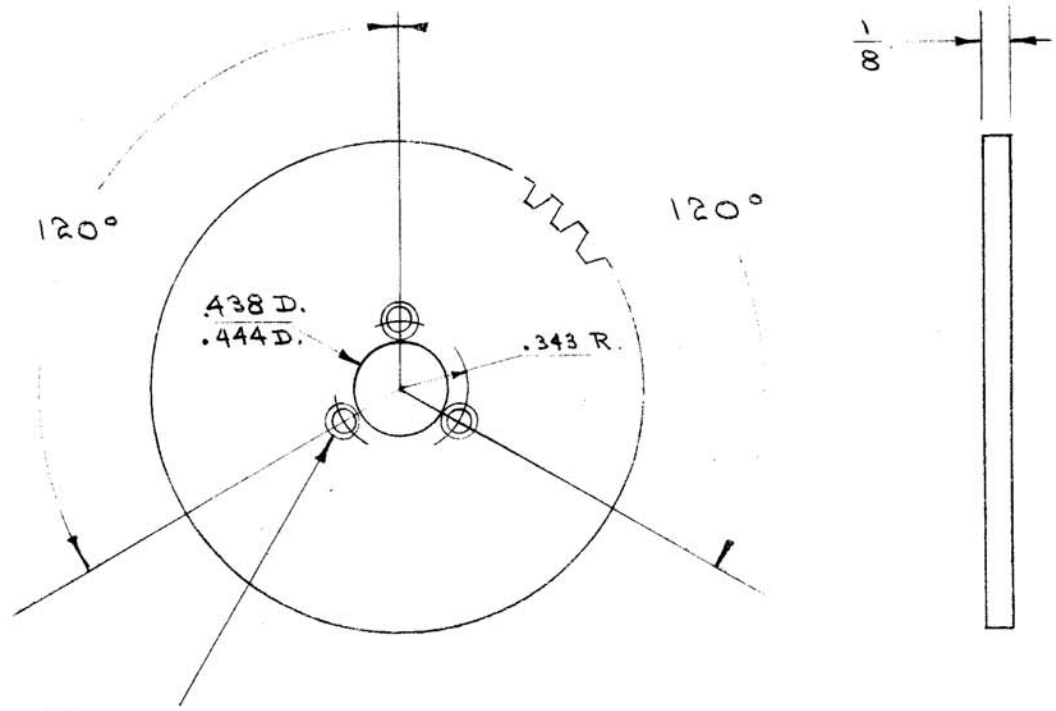

NO. OF TEETH 120
PITCH 48
PITCH DIAM. 2.5"
PRESSURE ANGLE 14½°
(COMMERCIAL CLASS 3 TOL.)

DRILL 1/8 (.125) D. THEN C'BORE 3/16 D. (.187) X 1/16 (.062) DEEP. 3 HOLES REQ.

REQ.	ITEM	PART NO.	DESCRIPTION	SYMBOL
1/8 (.125)			THE TECHNICAL MATERIEL CORP. MAMARONECK, NEW YORK	
STOCK SIZE				
PHENOLIC	—"—		FIBER GEAR	
MATERIAL	WEIGHT PER PC.			
LAMINATED GEAR STOCK				
TYPE & TEMPER				
—"—				
HEAT TREAT. SPEC.				
—"—				
FINISH & SPEC. NO.				

ISSUE	ITEM	CHANGED FROM	DATE	CN. NO.	DRAFTS	CHECKER	ENG. APP.
B	1	CLASS 3 TOL ADDED	5-16-55	2	PR	[illegible]	[illegible]
A		REDRAWN NO CHANGE	1/23/53		C.D.D.	[illegible]	[illegible]

DRAWN	ELEC. DES. APP.	MECH. DES. APP.
C.D.D. 1-23-53		[illegible]

CHECKED	FINAL APPROVAL
[illegible] 1-28-53	[illegible] 4/7/65

TOLERANCES

SCALE —"—

ALL OTHERS: DEC. DIM. ±, FRAC. DIM. ±, ANGULAR DIM. ±

DRILL, PUNCH, COMMERCIAL STOCK SIZES AND MANUFACTURERS TOLERANCES ARE NOT INCLUDED.

SUPERCEDES AMS 353.

GR-100 B.

FORM — 108