IF IT IS FOUND DESIRABLE TO CHANGE ANY TOLERANCE OR OTHER DETAIL SPECIFIED ON THIS DRAWING NOTIFY THE PURCHASER PROMPTLY.

MAXIMUM ALLOWABLE TOLERANCES HAVE BEEN DETERMINED AND DEVIATIONS WILL BE CAUSE FOR REJECTION. REMOVE ALL BURRS AND SHARP EDGES

STANDARD DRAWING

FS- 111

USED ON			
MODEL	PROJECT NO.	ASS'Y. NO.	DATE

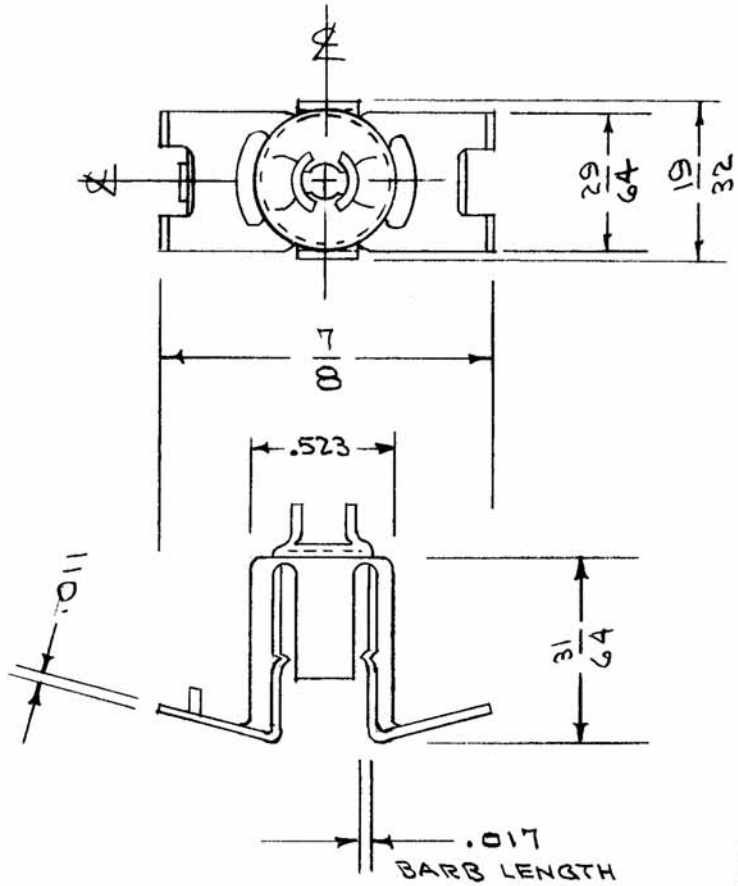

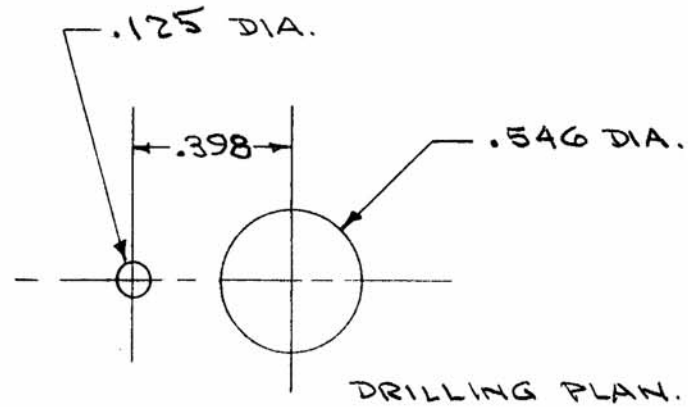

FOR.
SCREW SIZE - 6-32
COIL FORM O.D. - .500
PANEL RANGE - .034/.062

REF: TINNERMAN PRODUCTS INC. #C6801-632-24

REQ.	ITEM	PART NO.	DESCRIPTION	SYMBOL
			THE TECHNICAL MATERIEL CORP. MAMARONECK, NEW YORK	
STOCK SIZE				
STEEL			FASTENER, TUNING	
MATERIAL		WEIGHT PER PC.	LARGE	
SPRING				
TYPE & TEMPER			C.D.D. 12-8-54 / DRAWN	ELEC. DES. APP. / MECH. DES. APP.
HEAT TREATED				
HEAT TREAT. SPEC.			CHECKED	G.T.O / FINAL APPROVAL
CADMIUM PLATE .0002				
FINISH & SPEC. NO.				FS- 111

ISSUE	ITEM	CHANGED FROM	DATE	CN. NO.	DRAFTS	CHECKER	ENG. APP.

TOLERANCES		SCALE
ALL OTHERS	DEC. DIM. ± FRAC. DIM. ± ANGULAR DIM. ±	DRILL, PUNCH, COMMERCIAL STOCK SIZES AND MANUFACTURERS TOLERANCES ARE NOT INCLUDED.

FORM — 108