REQ. PER UNIT	USED ON MODEL	ASS'Y. NO.	DATE	DT-100
1	GPR		1-21-58	

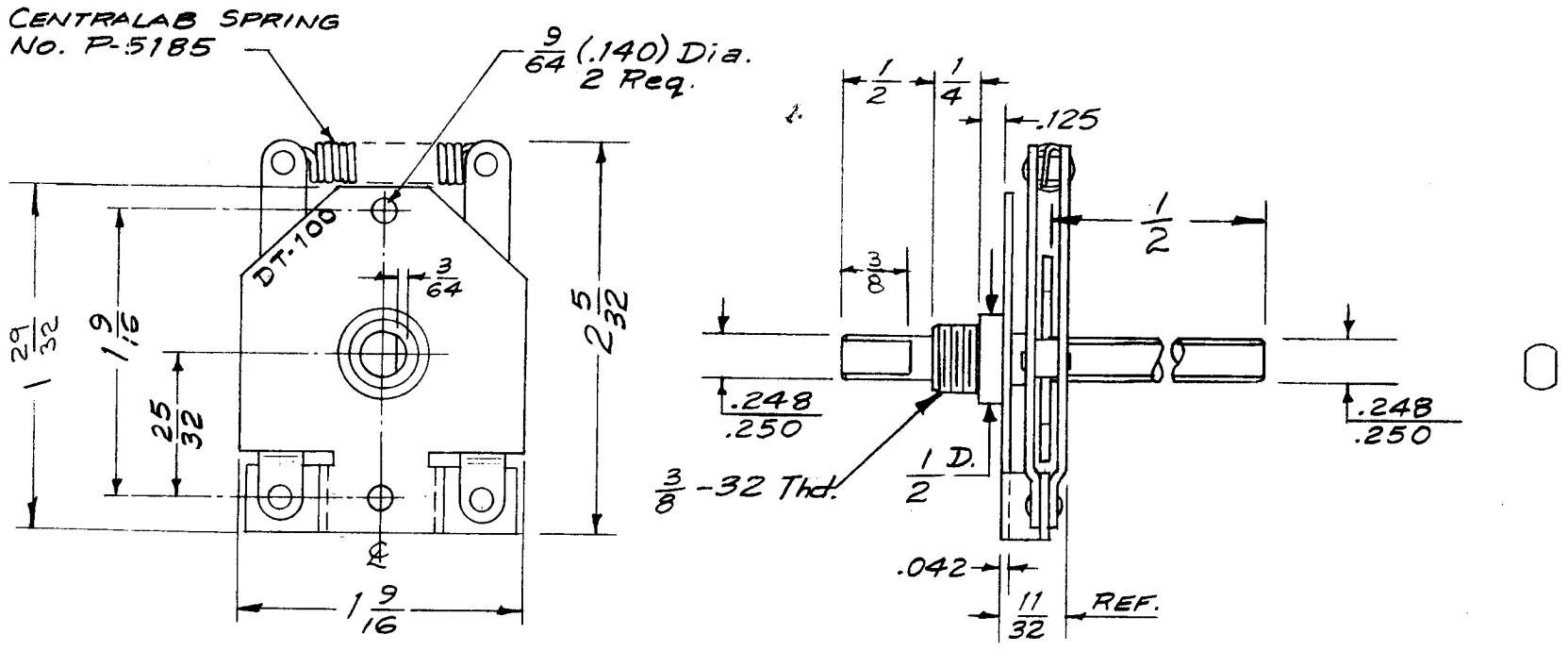

Notes:
No Stops.
6 Positions
60° Clover Leaf Index

Ref- CENTRALAB, Type "G" Index.

ISSUE	ITEM	CHANGED FROM	DATE	CH. NO.	DRAFTS	CHECKER	ENG. APP.

TOLERANCES
DEC. DIM. ±
FRAC. DIM. ±
ANGULAR DIM. ±

SCALE: FULL

MAXIMUM ALLOWABLE TOLERANCES HAVE BEEN DETERMINED AND ANY DEVIATIONS WILL BE CAUSE FOR REJECTION.
REMOVE ALL BURRS AND SHARP EDGES

REQ.	ITEM	PART NO.	DESCRIPTION	SYMBOL

STOCK SIZE: STEEL

MATERIAL

TYPE & TEMPER: 1/2

HEAT TREAT. SPEC.: 1/2

FINISH & SPEC. NO.: S105 Cadmium Plate

THE TECHNICAL MATERIEL CORP.
MAMARONECK, NEW YORK

DETENT, ROTARY SWITCH

DRAWN	CHECKED	FINAL APPROVAL
1-21-58		

ELEC. DES. APP. | MECH. DES. APP.

DT-100

FORM-108-A

SHAFT LENGTHS		
CODE	DIM. X	DIM. Y
1	7/8	7/16
2	7/8	5/8
3		
4		
5		
6		
7		
8		

SHAFT STYLE (X)	
CODE	STYLE
F	Flatted
R	Round

REQ. PER UNIT	USED ON			DT-101	A
	MODEL	ASS'Y. NO.	DATE		

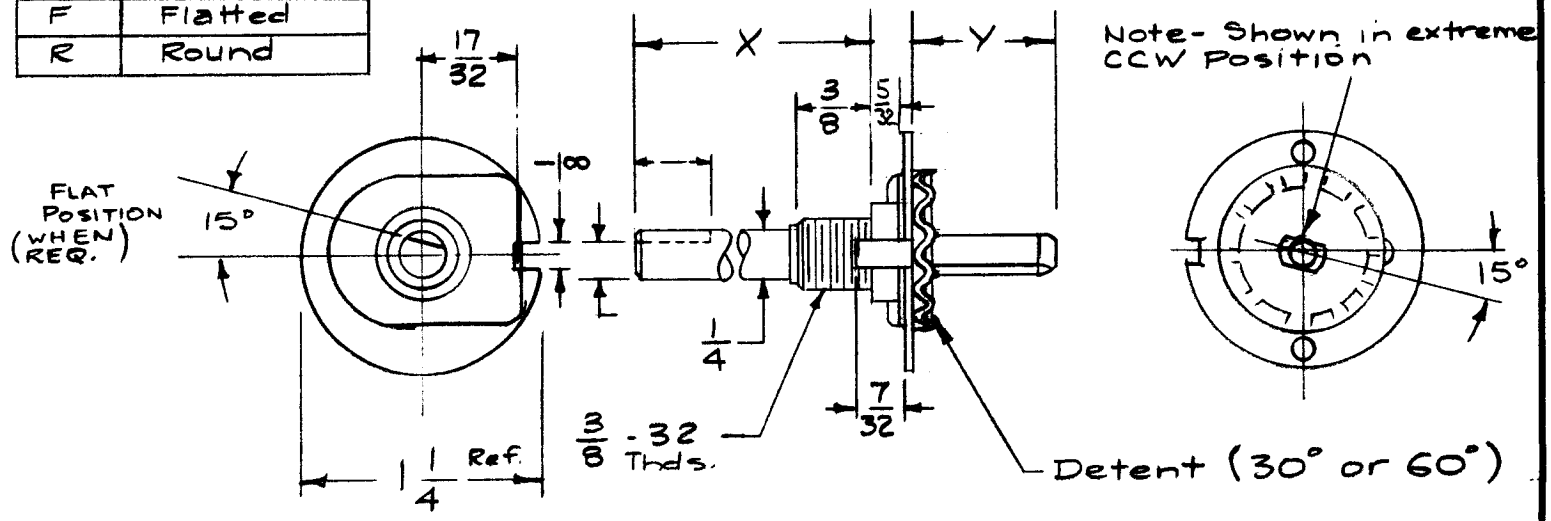

Type Designation to be as follows:

DT- 101 R 30-2-1

TMC DWG. NO. | SHAFT STYLE | ANGLE of THROW (DETENT) | NO. OF POSITIONS | SHAFT LENGTH CODE

STANDARD DRAWING

EXAMPLE - DT-101 F 30-4-1 = Detent, Flatted Shaft, 30° Throw, 4 Position, 7/8 & 7/16 Shaft "X" "Y"

Ref- OAK MFG. CO (TYPE F)

ISSUE	ITEM	CHANGED FROM	DATE	CH. NO.	DRAFTS	CHECKER	ENG. APP.
A	1	5/32 WAS 1/8	6/17/58	1	[illegible]		[illegible]

REQ.	ITEM	PART NO.	DESCRIPTION	SYMBOL

STOCK SIZE

MATERIAL

TYPE & TEMPER | HEAT TREAT. SPEC.

FINISH & SPEC. NO.

THE TECHNICAL MATERIEL CORP.
MAMARONECK, NEW YORK

DETENT, ROTARY SWITCH

DRAWN	CHECKED	FINAL APPROVAL
6/17/58		A.J.J.
[illegible]		

ELEC. DES. APP. | MECH. DES. APP.

DT-101 A

TOLERANCES

DEC. DIM. ±
FRAC. DIM. ±
ANGULAR DIM. ±

SCALE:

MAXIMUM ALLOWABLE TOLERANCES HAVE BEEN DETERMINED AND ANY DEVIATIONS WILL BE CAUSE FOR REJECTION.
REMOVE ALL BURRS AND SHARP EDGES

FORM-108-A

REQ. PER UNIT	USED ON MODEL	ASS'Y. NO.	DATE	DT-102	B
2	CLL-1		4-22-60		

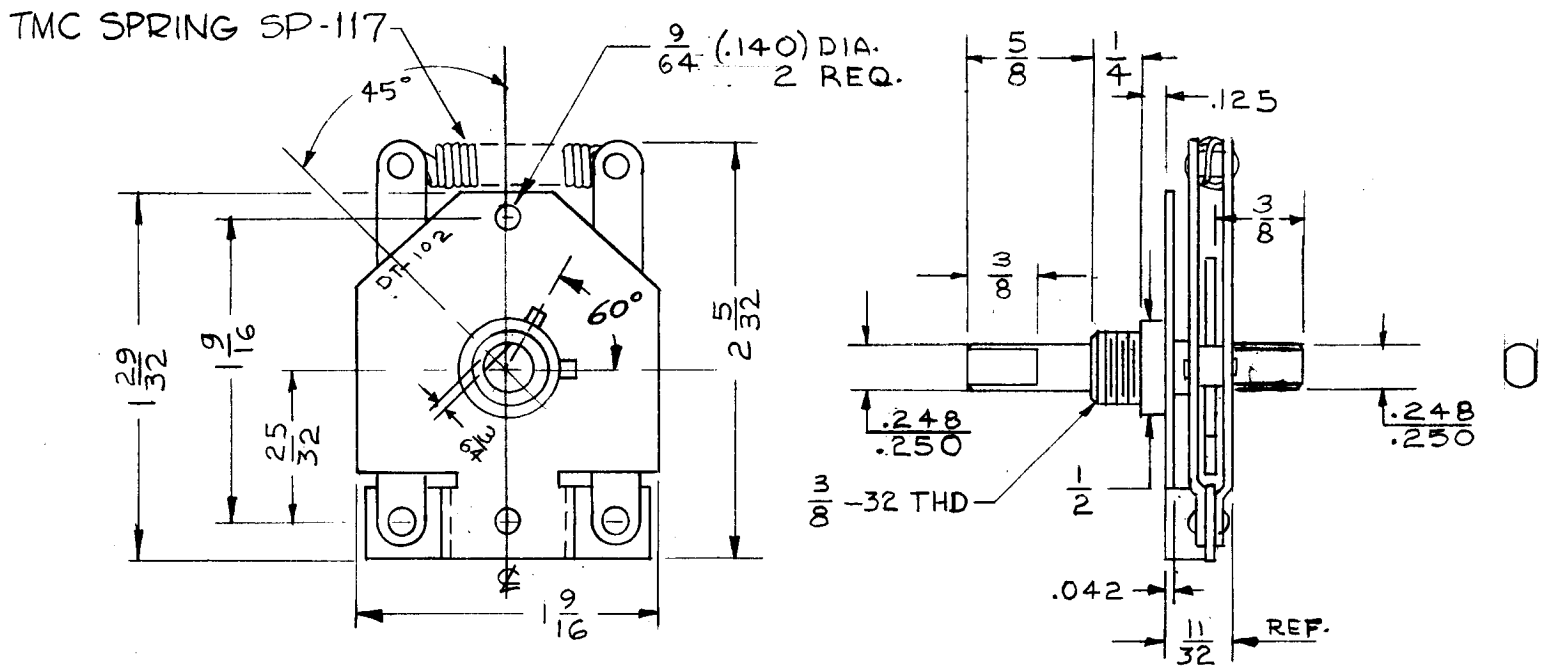

DETENT SHOWN IN FULL COUNTER CLOCKWISE POSITION
FLAT TO BE POSITIONED AS SHOWN W/DETENT FULLY CCW

NOTES:
- TWO STOPS
- 10 POSITIONS
- 30° COVER LEAF INDEX

REF. CENTRALAB, TYPE "G" INDEX

ISSUE	ITEM	CHANGED FROM	DATE	CH. NO.	DRAFTS	CHECKER	ENG. APP.
B		CHG. POS. OF DETENT	2-24-72	20548	GE	ES	ES
A	1	TMC SPRING SP-117 WAS SP-107	3-30-61	4524	DM	JCB	

REQ.	ITEM	PART NO.	DESCRIPTION	SYMBOL

STOCK SIZE: STEEL

MATERIAL:

TYPE & TEMPER: S105 CADMIUM PLATE

HEAT TREAT. SPEC.:

FINISH & SPEC. NO.:

THE TECHNICAL MATERIEL CORP.
MAMARONECK, NEW YORK

DETENT, ROTARY SWITCH

DRAWN: CY

CHECKED: J.H.

FINAL APPROVAL:

ELEC. DES. APP.: S.D.

MECH. DES. APP.:

DT-102 B

TOLERANCES
DEC. DIM. ±
FRAC. DIM. ± 1/64
ANGULAR DIM. ±

SCALE: FULL

MAXIMUM ALLOWABLE TOLERANCES HAVE BEEN DETERMINED AND ANY DEVIATIONS WILL BE CAUSE FOR REJECTION. REMOVE ALL BURRS AND SHARP EDGES

FORM 108-A

REQ. PER UNIT	MODEL	[redacted]	DATE	DT-104	B
1	CHG-1		9-2-60		

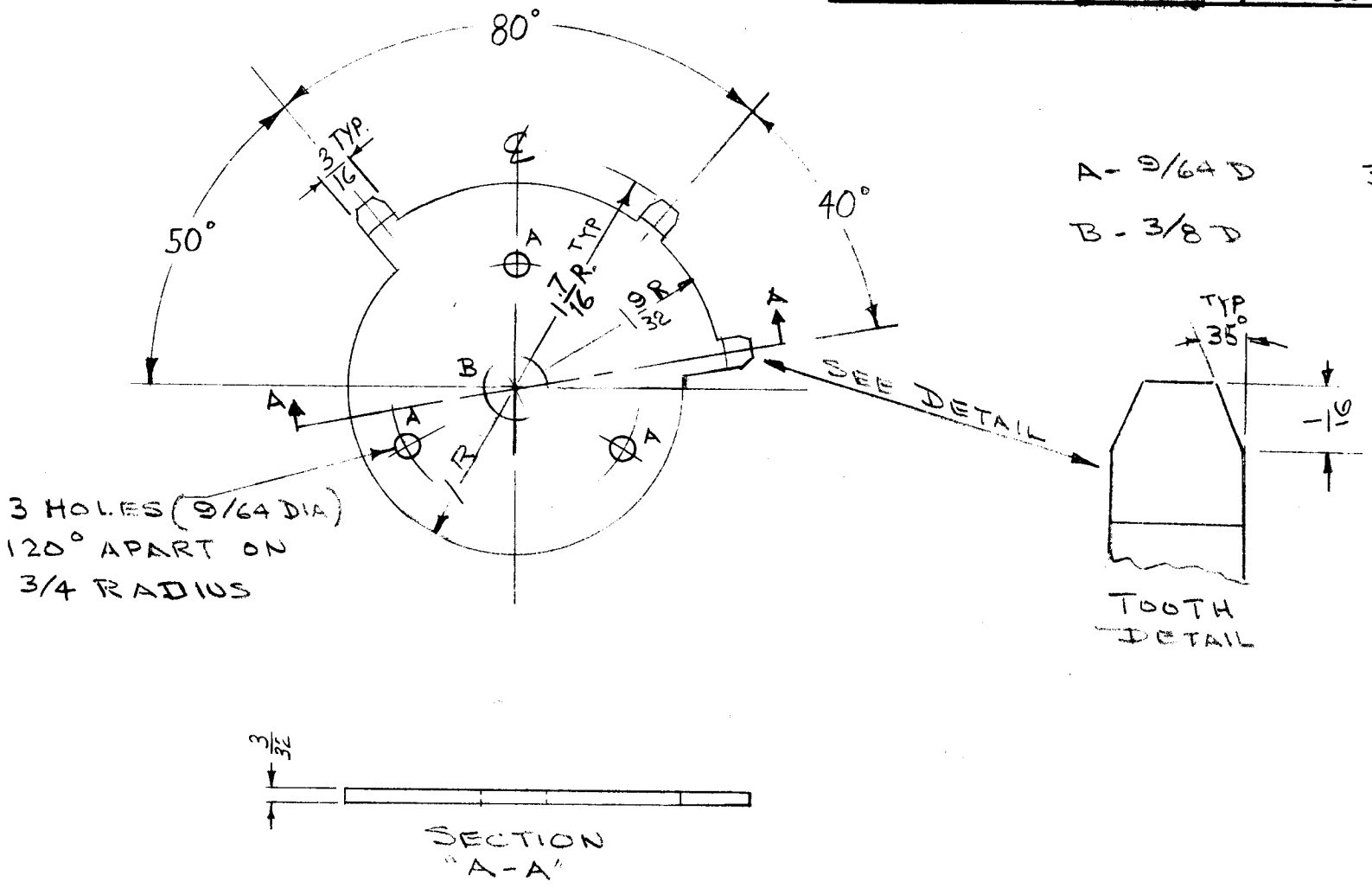

ISSUE	ITEM	CHANGED FROM	DATE	CH. NO.	DRAFTS	CHECKER	ENG. APP.
B	1	3/32 WAS 3/16	12/6/63	10519	[illegible]	[illegible]	[illegible]
A	1	1 7/16 R. WAS 1 15/32 R.	12-20-60	3745	W.A.F.	[illegible]	[illegible]

TOLERANCES	SCALE: FULL
DEC. DIM. ± FRAC. DIM. ± 1/64 ANGULAR DIM. ±	MAXIMUM ALLOWABLE TOLERANCES HAVE BEEN DETERMINED AND ANY DEVIATIONS WILL BE CAUSE FOR REJECTION. REMOVE ALL BURRS AND SHARP EDGES

REQ.	ITEM	PART NO.	DESCRIPTION	SYMBOL
			THE TECHNICAL MATERIEL CORP. MAMARONECK, NEW YORK	
		STOCK SIZE	DETENT, SWITCH	
		BRASS		
		MATERIAL		
		1/2 H		
		TYPE & TEMPER	HEAT TREAT. SPEC.	
		NICKEL PLATE .0003		
		FINISH & SPEC. NO.		

DRAWN	CHECKED	FINAL APPROVAL	
WF	[illegible]	[illegible]	
ELEC. DES. APP	MECH. DES. APP	DT-104	B

FORM 108-A

THE CONTENTS OF THIS DRAWING ARE THE EXCLUSIVE PROPERTY OF THE TECHNICAL MATERIEL CORP. ITS UNAUTHORIZED USE OR REPRODUCTION IN WHOLE OR IN PART IS STRICTLY FORBIDDEN.

REQ. PER UNIT	USED ON MODEL	ASS'Y. NO.	DATE	
1	HFI-1		1-10-62	DT-107

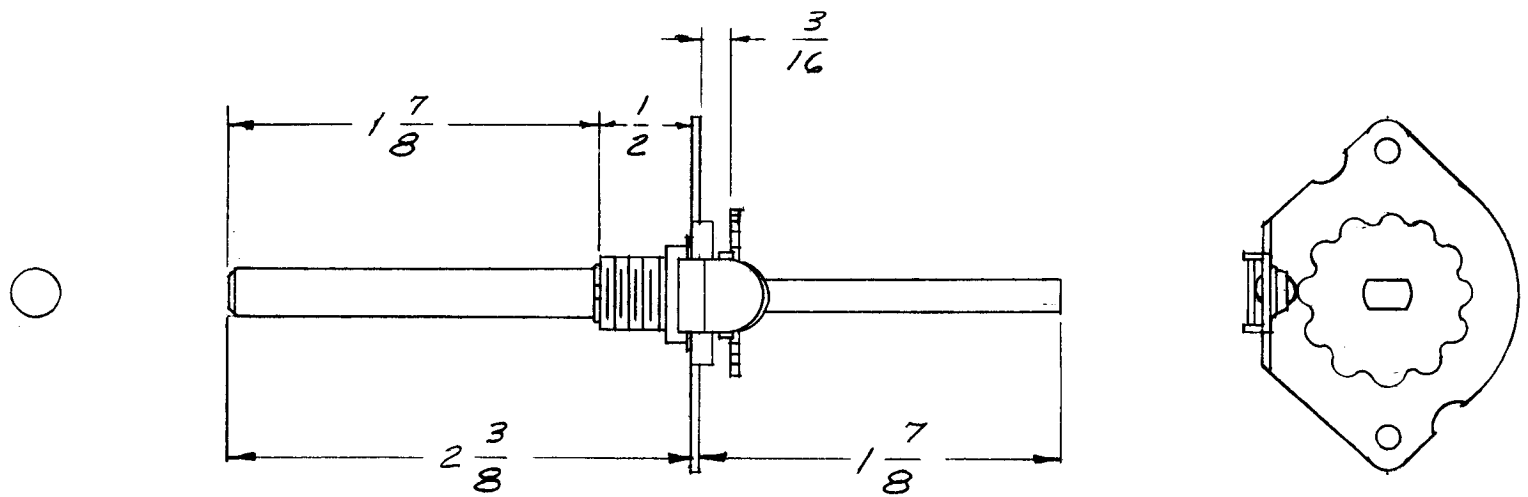

SYM	DESCRIPTION	DATE	CH. NO.	DRAFTS	CHECKER	ENG. APP.

UNLESS OTHERWISE SPECIFIED:
DIMENSIONS ARE IN INCHES
TOLERANCES ON
FRAC. ± 1/64 DEC. ± .005 ANGLES ± 1/2°

A

SCALE: S401-61(31-11898-1)

MAXIMUM ALLOWABLE TOLERANCES HAVE BEEN DETERMINED AND ANY DEVIATIONS WILL BE CAUSE FOR REJECTION. REMOVE ALL BURRS AND SHARP EDGES

REQ.	ITEM	PART NO.	DESCRIPTION	SYMBOL

STOCK SIZE: SHAFT STEEL

MATERIAL: CR

TYPE & TEMPER | HEAT TREAT. SPEC.

FINISH & SPEC. NO.: CADMIUM PLATED

THE TECHNICAL MATERIEL CORP.
MAMARONECK, NEW YORK

DETENT, SWITCH (ROTARY)

DRAWN	CHECKED	FINAL APPROVAL
W.S.		

ELEC. DES. APP. | MECH. DES. APP.

DT-107

TMC FORM NO. 108-A

DEFIANCE NO. 1020 36845

REQ. PER UNIT	USED ON			DT109	Ø
	MODEL	ASS'Y. NO.	DATE		
	LRCC-1	A5014	7-6-65		
	LRCM-1		7-6-65		

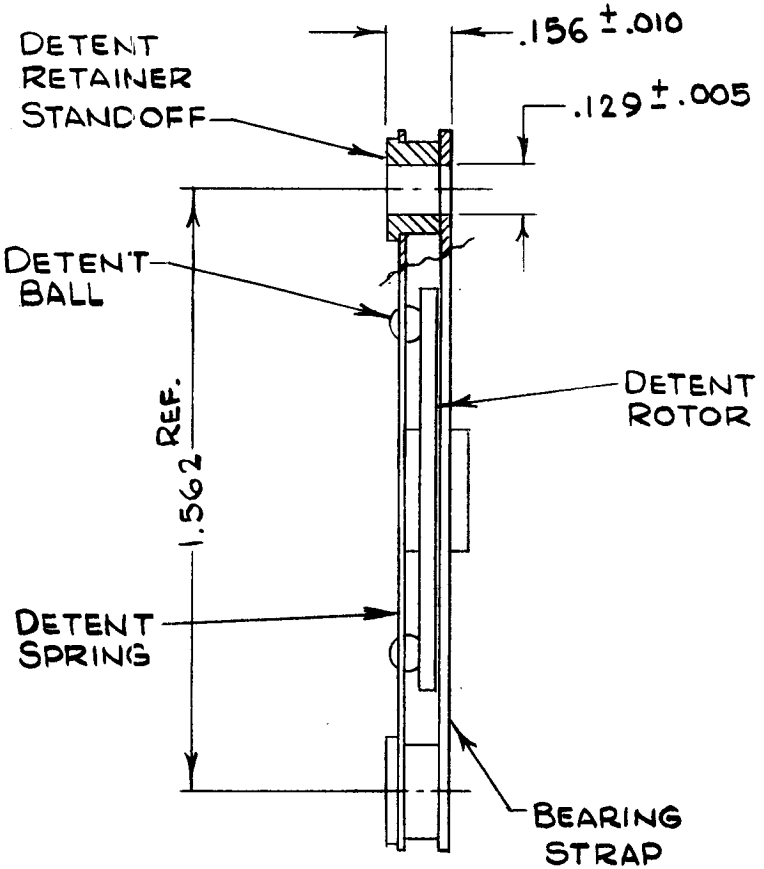

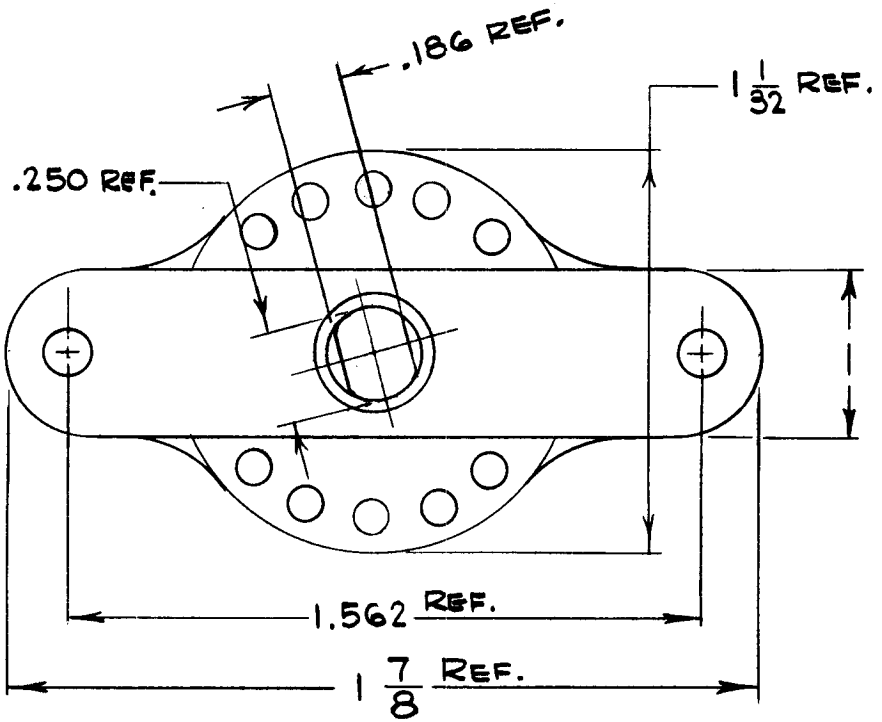

SYM	DESCRIPTION	DATE	CH. NO.	DRAFTS	CHECKER	ENG. APP.
Ø	ORIGINAL RELEASE FOR PRODUCTION	8/4/66	Ø	CV.		

UNLESS OTHERWISE SPECIFIED DIMENSIONS ARE IN INCHES AND INCLUDE CHEMICALLY APPLIED OR PLATED FINISHES

SCALE —in—

TOLERANCES: DECIMALS .X ± .05, .XX ± .01, .XXX ± .005; FRACTIONS ± 1/64; ANGLES ± 0° 30'

CODE C

S401-281 (149700-009)

REQ.	ITEM	PART NO.	DESCRIPTION	SYMBOL

STOCK SIZE

MATERIAL

TYPE & TEMPER | HEAT TREAT. SPEC.

FINISH & SPEC. NO.

EATON

THE TECHNICAL MATERIEL CORP.
MAMARONECK, NEW YORK

DETENT, ROTARY ASSY.
16 POSITION

DRAWN	CHECKED	FINAL APPROVAL
H. AUSTIN		H. E. Eaton

ELEC. DES. APP. | MECH. DES. APP.

DT109 Ø

ML

TMC FORM 108-A

REPROVEL NO. 440H 23845

APPLICATION			REVISIONS						
QTY	MODEL USED ON	ASS'Y NO.	LTR	DESCRIPTION	DATE	E.M.N.NO	DRAFT	CHKD	APPD
	GPR110		X1	PIN & LOCATION DIMS. DEL.	1-10-76		GDL		
			Ø	ORIGINAL RELEASE FOR PRODUCTION	5-23-77			W.B.	+

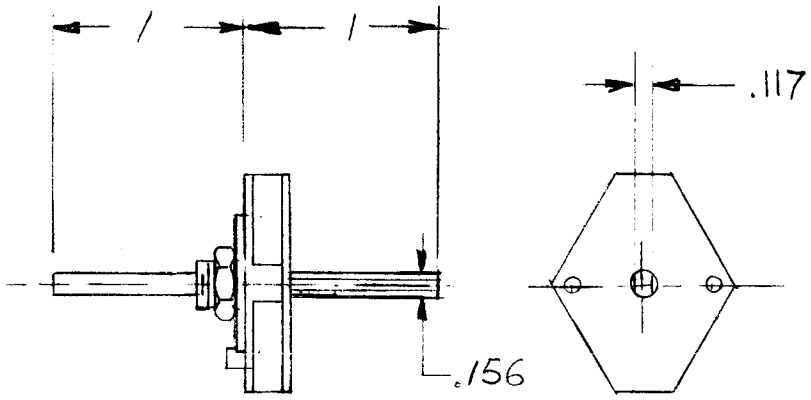

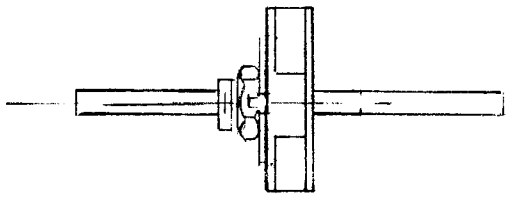

SPECIFICATIONS:
30° THROW

S401
(IEE SHADOW)
P/N: ESK-10-30

UNLESS OTHERWISE SPECIFIED DIMENSIONS ARE IN INCHES AND INCLUDE CHEMICALLY APPLIED OR PLATED FINISHES	REQ'D	ITEM	PART NUMBER	DESCRIPTION	SYM.
DECIMALS .X ± .05 .XX ± .01 .XXX ± .005 TOLS. FRACTIONS 1/64 ANGLES 0° -30'	F. BUDETTI			LIST OF MATERIAL	
MATERIAL	FINAL APPROVAL		DATE 7/10/77	THE TECHNICAL MATERIEL CORP. MAMARONECK, NEW YORK	
FINISH	MECH. DES.		DATE		
	ELECT. DES.		DATE	DETENT SW 30°	
	CHECKED		DATE		
	DRAWN G. Drucker		DATE 2-28-74		

NOTICE TO PERSONS RECEIVING THIS DRAWING
THE TECHNICAL MATERIEL CORPORATION claims proprietary right in the material disclosed hereon. This drawing is issued in confidence for engineering information only and may not be reproduced or used to manufacture anything shown hereon without permission from THE TECHNICAL MATERIEL CORPORATION to the user. This drawing is loaned for mutual assistance and is subject to recall at any time.

SIZE	CODE IDENT. NO.	DWG NO.	ISSUE
A	82679	DT 110	Ø
SCALE		SHEET OF	

FCI-10-170