TMC P/N	MFGR P/N	DRIVE SHAFT LOCATION	RANGE	DRIVE
CY102	A114235	1	0-99999	1 COUNT, 1 REVOL
CY102-2	A114135	1	0-9999.9	10 COUNTS, 1 REVOL
CY102-3	A114125	2	0-9999.9	10 COUNTS, 1 REVOL

CY-102 A

REQ PER UNIT	USED ON			
	MODEL	PROJECT NO.	ASS'Y. NO.	DATE

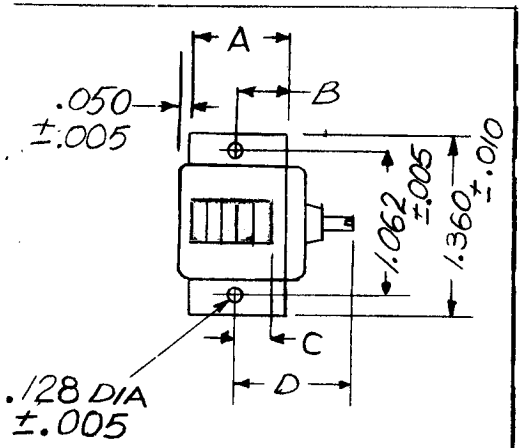

FIGURE 1

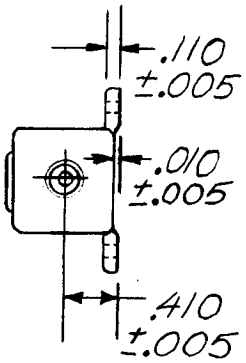

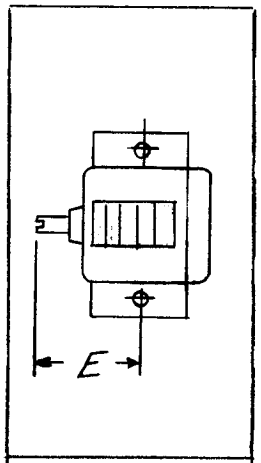

FIGURE 2

SYMBOL	A	B	C	D	E
DIA	.750 ±.005	.375 ±.005	.259 ±.005	.881 ±.002	.770 ±.020

REQ.	ITEM	PART NO.	DESCRIPTION	SYMBOL

STOCK SIZE

MATERIAL | WEIGHT PER PC.

TYPE & TEMPER

HEAT TREAT. SPEC.

FINISH & SPEC. NO.

THE TECHNICAL MATERIEL CORP.
MAMARONECK, NEW YORK

COUNTER

DRAWN	ELEC. DES. APP.	MECH. DES. APP.
	A. J. J.	

CHECKED	FINAL APPROVAL
	A. J. J.

CY-102 A

ISSUE	ITEM	CHANGED FROM	DATE	CN. NO.	DRAFTS	CHECKER	ENG. APP.
A		REV & UPDATED	2-19-69	19256	GE		FB

TOLERANCES

ALL OTHERS: DEC. DIM. ± ; FRAC. DIM. ± ; ANGULAR DIM. ±

SCALE S 401-22

DRILL, PUNCH, COMMERCIAL STOCK SIZES AND MANUFACTURERS TOLERANCES ARE NOT INCLUDED.

FORM — 1 8

IF IT IS FOUND DESIRABLE TO CHANGE ANY TOLERANCE OR OTHER DETAIL SPECIFIED ON THIS DRAWING NOTIFY THE PURCHASER PROMPTLY.

MAXIMUM ALLOWABLE TOLERANCES HAVE BEEN DETERMINED AND DEVIATIONS WILL BE CAUSE FOR REJECTION. REMOVE ALL BURRS AND SHARP EDGES

CY-103

REQ PER UNIT	USED ON			
	MODEL	PROJECT NO.	ASS'Y. NO.	DATE
1	YOX			6-11-54

NOTE:
PAINT SHADED AREA WITH ALUMINUM PAINT.
MODIFY HOLES AS SHOWN

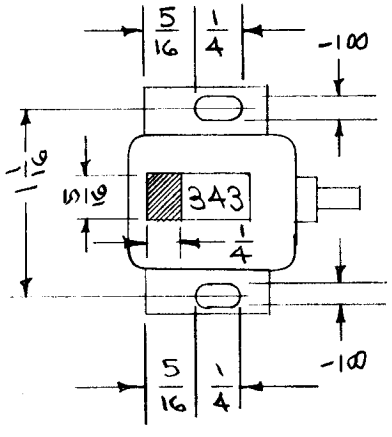

USED AS ALTERNATE FOR PO-100

REF: CY-102

REQ.	ITEM	PART NO.	DESCRIPTION	SYMBOL

STOCK SIZE

MATERIAL | WEIGHT PER PC.

TYPE & TEMPER

HEAT TREAT. SPEC.

FINISH & SPEC. NO.

THE TECHNICAL MATERIEL CORP.
MAMARONECK, NEW YORK

COUNTER MODIFICATION OF CY-102

DRAWN	ELEC. DES. APP.	MECH. DES. APP.
JAS		WSC
CHECKED 6/11/54	FINAL APPROVAL	WAG

CY-103.

ISSUE	ITEM	CHANGED FROM	DATE	CN. NO.	DRAFTS	CHECKER	ENG. APP.

TOLERANCES

ALL OTHERS: DEC. DIM. ± ; FRAC. DIM. ± ; ANGULAR DIM. ±

SCALE —

DRILL, PUNCH, COMMERCIAL STOCK SIZES AND MANUFACTURERS TOLERANCES ARE NOT INCLUDED.

FORM — 108

IF IT IS FOUND DESIRABLE TO CHANGE ANY TOLERANCE OR OTHER DETAIL SPECIFIED ON THIS DRAWING NOTIFY THE PURCHASER PROMPTLY.

MAXIMUM ALLOWABLE TOLERANCES HAVE BEEN DETERMINED AND DEVIATIONS WILL BE CAUSE FOR REJECTION. REMOVE ALL BURRS AND SHARP EDGES

CY-104 A

REQ. PER UNIT	USED ON MODEL	PROJECT NO.	ASS'Y. NO.	DATE
1	PMO	285		7-21-54
1	RTF			2-3-56
1	RTF-2	F/D		11-20-58

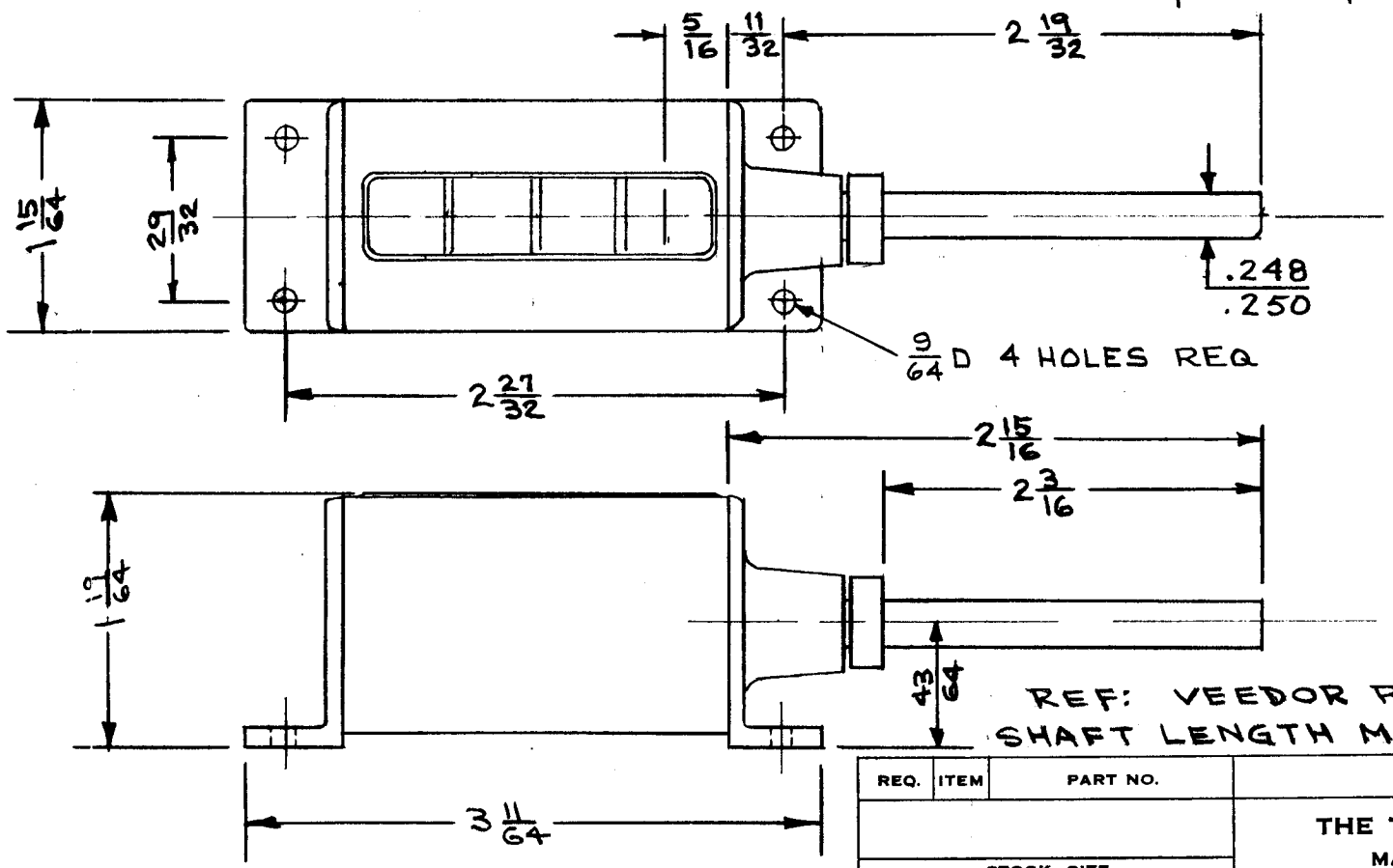

REF: VEEDOR ROOT #ED-110244
SHAFT LENGTH MODIFIED AS SHOWN

REQ.	ITEM	PART NO.	DESCRIPTION	SYMBOL

STOCK SIZE

MATERIAL | WEIGHT PER PC.

TYPE & TEMPER

HEAT TREAT. SPEC.

FINISH & SPEC. NO.

THE TECHNICAL MATERIEL CORP.
MAMARONECK, NEW YORK

REVOLUTION COUNTER
NON RESET

DRAWN	ELEC. DES. APP.	MECH. DES. APP.
7-21-54	A. J. J.	

CHECKED	FINAL APPROVAL
M.H.S.	A. J. J.

CY-104 A

ISSUE	ITEM	CHANGED FROM	DATE	CN. NO.	DRAFTS	CHECKER	ENG. APP.
A	1	Part No. was A 110244	4/9/59	1	J.C.B.		

TOLERANCES

ALL OTHERS: DEC. DIM. ± ; FRAC. DIM. ± ; ANGULAR DIM. ±

SCALE

DRILL, PUNCH, COMMERCIAL STOCK SIZES AND MANUFACTURERS TOLERANCES ARE NOT INCLUDED.

FORM — 108

REQ. PER UNIT	USED ON MODEL	ASS'Y. NO.	DATE	CY-105	A
4	GPT 10K	T1-101			

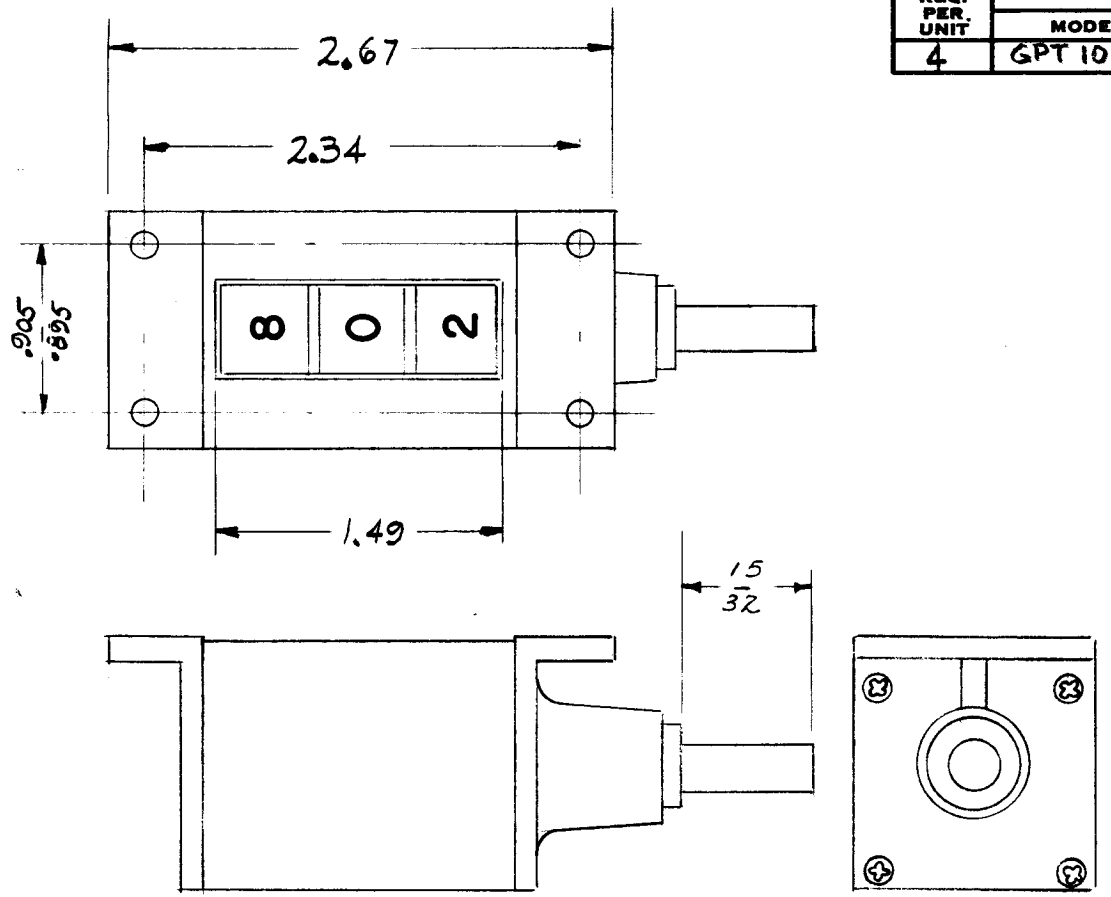

ISSUE	ITEM	CHANGED FROM	DATE	CH. NO.	DRAFTS	CHECKER	ENG. APP.
A		DIM. CHG 15/32 WAS 23/32	5-6-59	958			

REQ.	ITEM	PART NO.	DESCRIPTION	SYMBOL

STOCK SIZE

MATERIAL

TYPE & TEMPER | HEAT TREAT. SPEC.

FINISH & SPEC. NO.

THE TECHNICAL MATERIEL CORP.
MAMARONECK, NEW YORK

COUNTER, ROTATING, 3 FIGURES

DRAWN	CHECKED	FINAL APPROVAL
10KILLO		

ELEC. DES. APP. | MECH. DES. APP.

CY-105 A

TOLERANCES

DEC. DIM. ±
FRAC. DIM. ±
ANGULAR DIM. ±

SCALE: 5401-22 (EP110243)

MAXIMUM ALLOWABLE TOLERANCES HAVE BEEN DETERMINED AND ANY DEVIATIONS WILL BE CAUSE FOR REJECTION.
REMOVE ALL BURRS AND SHARP EDGES

FORM 108-A

REQ. PER UNIT	USED ON M DEL	ASS'Y. N.	DATE	CY-106	B
1	GPT-10K	AC-107	4-13-59		

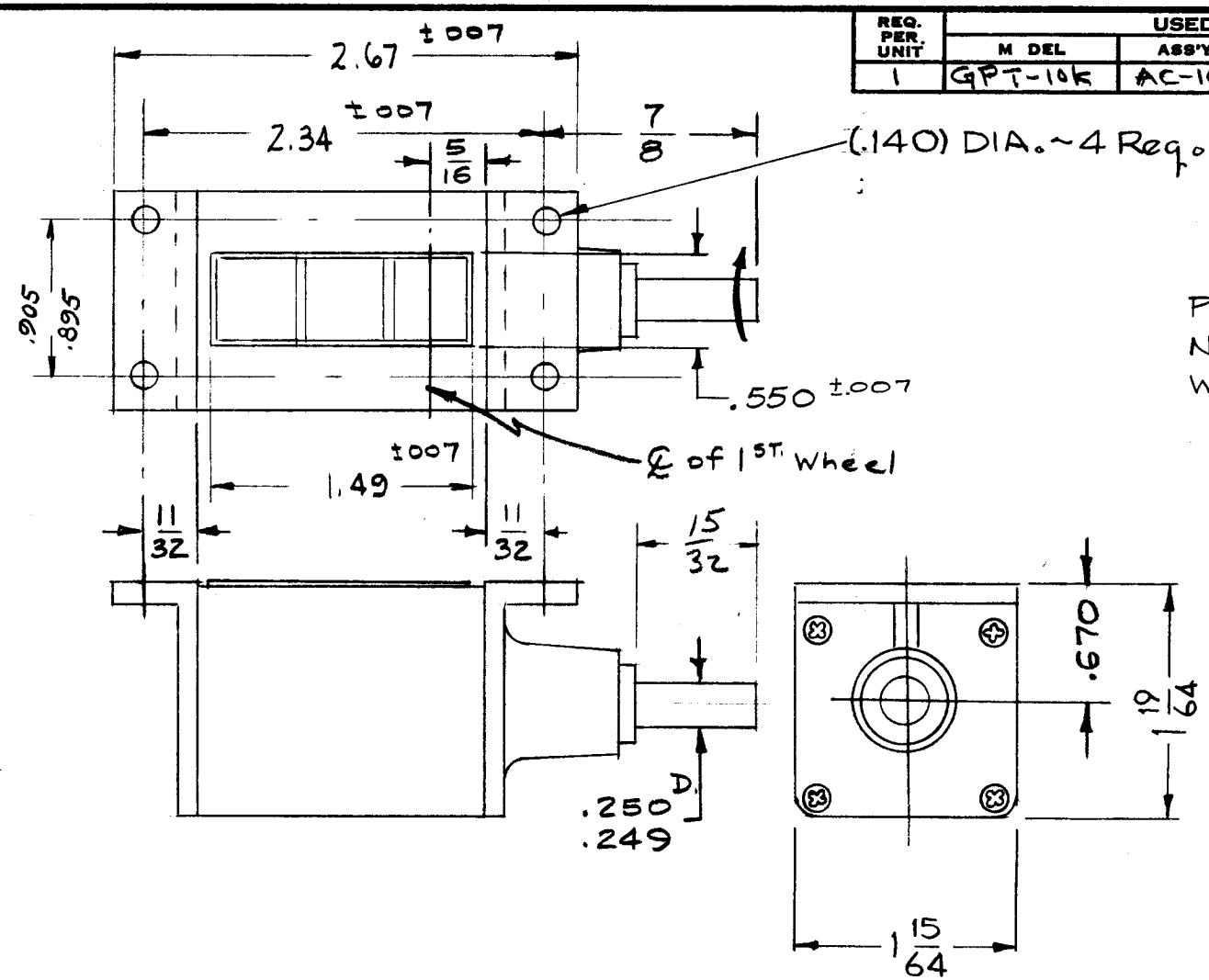

PLAIN BEARING TYPE
NON-RESET
WHEELS - BLANK WHITE

ISSUE	ITEM	CHANGED FROM	DATE	CH. NO.	DRAFTS	CHECKER	ENG. APP.
B	2	ADDED - 5/16, 11/32, 7/8, .550, .250D, .670 DIM.	11/4/59	1534	16	[illegible]	
	1	NUMBERS DELE. FROM WHEELS.					
A		15/32 was 23/32	5/14/59	958	[illegible]	[illegible]	[illegible]

TOLERANCES

DEC. DIM. ±
FRAC. DIM. ±
ANGULAR DIM. ±

S-401-22 (#EP110243 w/Blank white wheels)

MAXIMUM ALLOWABLE TOLERANCES HAVE BEEN DETERMINED AND ANY DEVIATIONS WILL BE CAUSE FOR REJECTION. REMOVE ALL BURRS AND SHARP EDGES

REQ.	ITEM	PART NO.	DESCRIPTION	SYMBOL

STOCK SIZE

MATERIAL

TYPE & TEMPER | HEAT TREAT. SPEC.

FINISH & SPEC. NO.

THE TECHNICAL MATERIEL CORP.
MAMARONECK, NEW YORK

COUNTER, ROTATING, 3 FIGURE

DRAWN	CHECKED	FINAL APPROVAL	
IORILLO	[illegible]	ARB	
	ELEC. DES. APP	MECH. DES. APP	CY-106 B

FORM 108-A

STANDARD DRAWING

REQ. PER UNIT	USED ON MODEL	ASS'Y. NO.	DATE	CY-108	C
1	TIS-3		9-21-60		

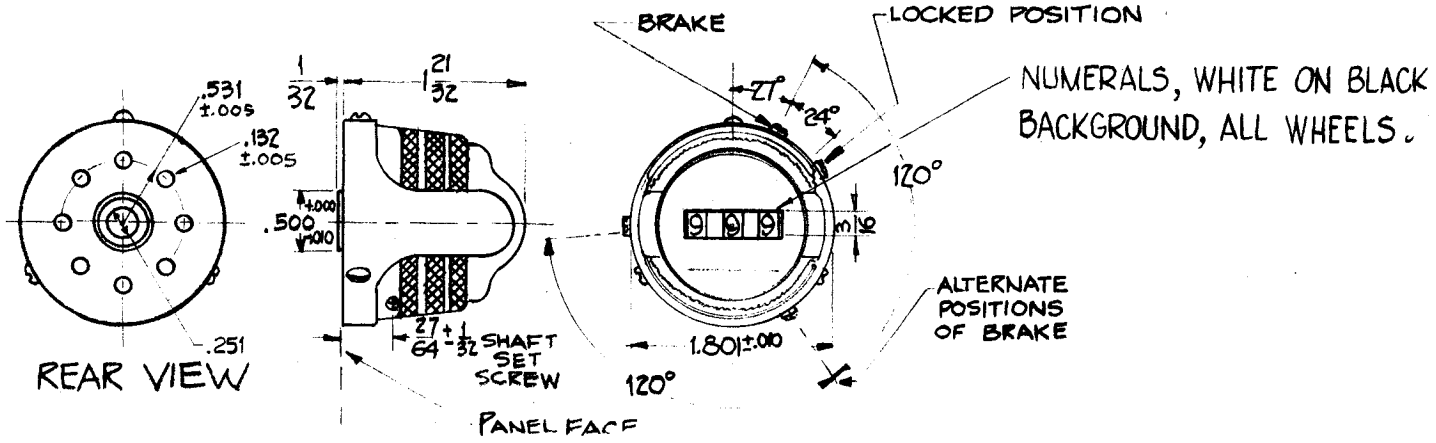

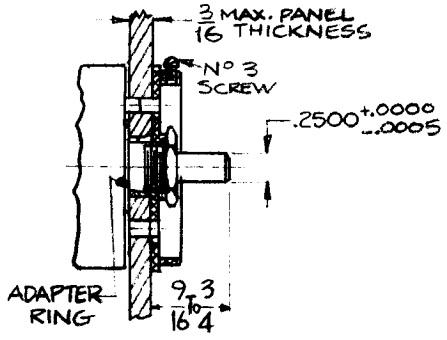

INTERNAL GEARS ARE TO BE BRASS

Mounting on Panels Over 1/8 Showing Use of Adapter Ring N°61026 To Center Potentiometer

ISSUE	ITEM	CHANGED FROM	DATE	CH. NO.	DRAFTS	CHECKER	ENG. APP.
C		MFRS. PART NO. CHG	3.20.69	—	GE		
B	2 1	TD 5401 - (1309-BS-200-2) ADD GEAR NOTE ADDED	8.26.64	12224	WB		JC
A	1	Note added for numerals	3.30.61	4531	DM	JCB	

REQ.	ITEM	PART NO.	DESCRIPTION	SYMBOL

STOCK SIZE

MATERIAL

TYPE & TEMPER | HEAT TREAT. SPEC.

FINISH & SPEC. NO.

THE TECHNICAL MATERIEL CORP.
MAMARONECK, NEW YORK

COUNTER, PRECISION

DRAWN | CHECKED | FINAL APPROVAL

ELEC. DES. APP | MECH. DES. APP

CY-108 C

TOLERANCES

DEC. DIM. ±
FRAC. DIM. ±
ANGULAR DIM. ±

SCALE: S401-125 (1309AS896-41

MAXIMUM ALLOWABLE TOLERANCES HAVE BEEN DETERMINED AND ANY DEVIATIONS WILL BE CAUSE FOR REJECTION.
REMOVE ALL BURRS AND SHARP EDGES

FORM 108-A

REQ. PER UNIT	USED ON MODEL	ASS'Y. NO.	DATE
1	GPT-200K (AT-105)	A-2765	12-19-63
1	GPT-200K (AT-105)	A-2766	4-20-64

CY-109 | O

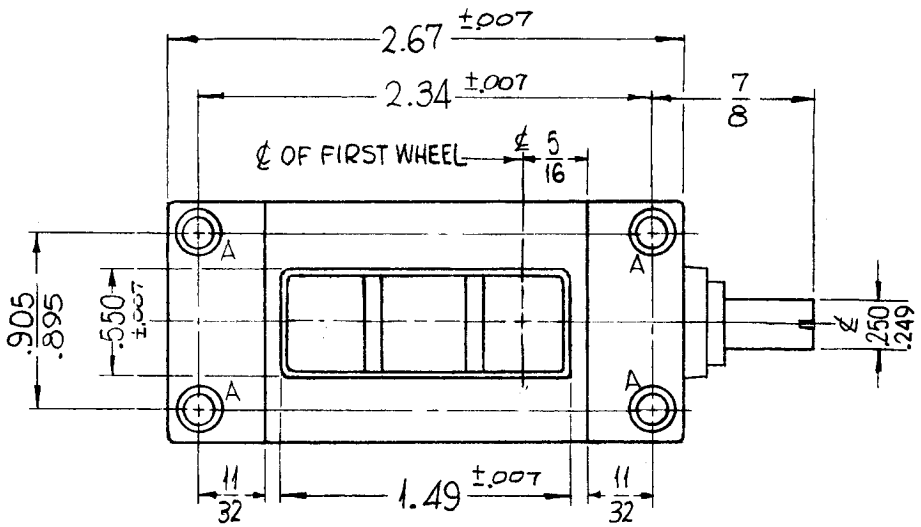

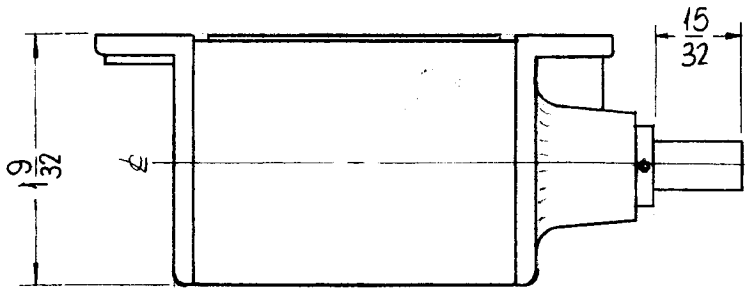

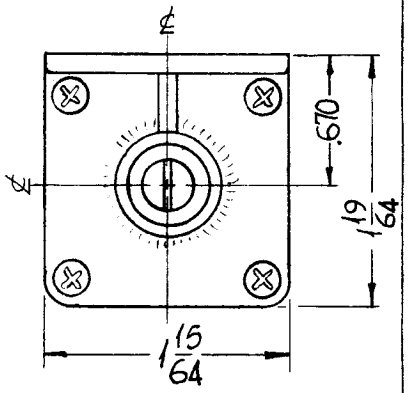

SPECS

PLAIN BEARING TYPE

NON-RESET

WHEELS-BLANK WHITE

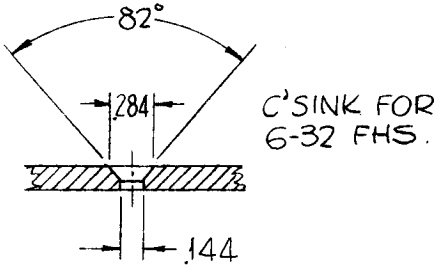

A - DETAIL
(4 REQ.)

SYM	DESCRIPTION	DATE	CH. NO.	DRAFTS	CHECKER	ENG. APP.
O	ORIGINAL RELEASE FOR PRODUCTION	5-13-64	O	A.M.		

UNLESS OTHERWISE SPECIFIED
DIMENSIONS ARE IN INCHES AND INCLUDE
CHEMICALLY APPLIED OR PLATED FINISHES

SCALE S404-22 (EP 110243)

TOLERANCES
DECIMALS .X ±.05 .XX ±.01 .XXX ±.005
FRACTIONS ± 1/64
ANGLES ± 0° 30'

CODE C

REQ.	ITEM	PART NO.	DESCRIPTION	SYMBOL

STOCK SIZE

MATERIAL

TYPE & TEMPER | HEAT TREAT. SPEC.

FINISH & SPEC. NO.

F. BUDETTI

THE TECHNICAL MATERIEL CORP.
MAMARONECK, NEW YORK

COUNTER, ROTATING 3 FIGURES

DRAWN	CHECKED	FINAL APPROVAL
SRG	19	RXC
	3/4/64	CY-109 O

ELEC. DES. APP. | MECH. DES. APP.

TMC FORM 108-A

STOCK NO. 440H