TMC P/N	TEMP. COEF.	CAPACITANCE pf	W.V.D.C.	MIN "Q" AT 1 Mc	MFGR'S P/N	STYLE
CV112-1	NPO	5.5-18	200	500	538-002-92A	A
-2	N650	9-35	100	500	538-002-110D	A
-3	N300	2.5-11	200	50 Ω	538-002-90B	A
-4	NPO	2-8	200	500	538-002-89A	A
-5	N1500	15-60	100	500	538-002-112F	A
-6	N1500	15-60	100	500	538-006-112F	B
-7	NPO	5.5-18	200	500	538-011-92A	C
-8	N650	9-35	100	500	538-011-110D	C
-9	N1500	15-60	100	500	538-016-112F	C
-10	N650	9-35	100	500	538-016-110D	C
-11	N650	9-35	100	500	538-006-94R	B

REVISIONS

ZONE	LTR	DESCRIPTION	DATE	E.M.N.NO	DRAFT	CHKD	APPD
	E	REDRAWN & REVISED FROM 1 SZ	8/30/67	18454	C.V.	[illegible]	EFM
	F	PICTORIAL REVISED -7,-8,-9 ADDED	5.7.68	18909	[illegible]	[illegible]	EFM
	G	MFG P/N CLARIFIED, -10 ADDED	12/27/68	19128	CV	[illegible]	FB
	H	ADDED -11	4/28/72	20650	GE	[illegible]	[illegible]
	I	*NOTE TO BE PURCH. ONLY FROM THIS VENDOR ADD.	9-679	21499	MAC	RU	[illegible]

SPECIFICATIONS

WORKING VOLTAGE: SEE CHART (W.V.D.C.)

OPERATING TEMP. RANGE: -55°C TO +125°C

LIFE TEST: 2 x VDCW

FLASH TEST: 500 VDC FOR 1-5 SEC (50 mA MAX CHARGING CURRENT)

TORQUE: MIN OF 1, MAX OF 6 INCH OUNCES

MARKING: MFGR'S NAME OR CODE; TEMP. COEF
CAPACITANCE RANGE; INDICATE ROTOR WITH ARROW

DIELECTRIC: CERAMIC

BASE: LOW LOSS STEATITE CERAMIC

TERMINALS: SILVER PLATED

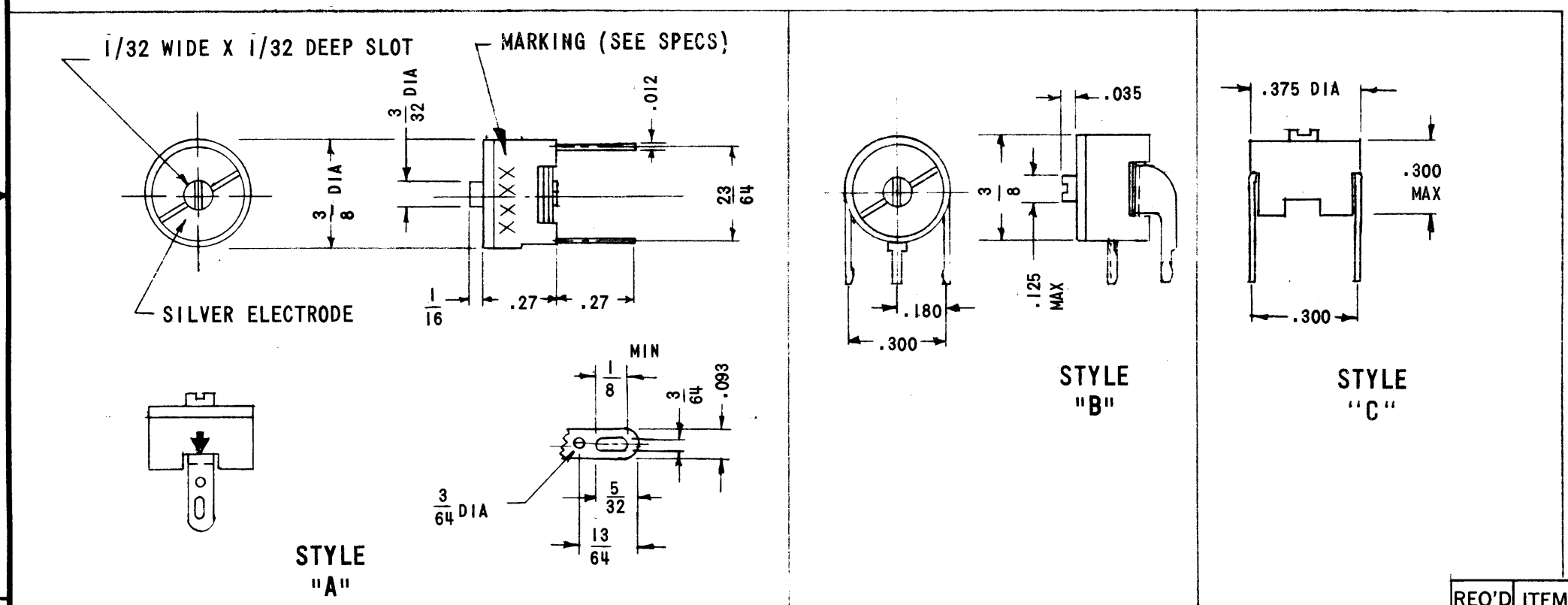

NOTE:

FOR ADDITIONAL DATA ON STYLE B & C REFER TO STYLE "A".

* TO BE PURCH. ONLY FROM THIS VENDOR

QTY / UNIT	MODEL USED ON	ASS'Y NO.
	HFSR-4	
	TRX-1	

APPLICATION

CODE C 5401-20[illegible]

NOTICE TO PERSONS RECEIVING THIS DRAWING

THE TECHNICAL MATERIEL CORPORATION claims proprietary right in the material disclosed hereon. This drawing is issued in confidence for engineering information only and may not be reproduced or used to manufacture anything shown hereon without permission from THE TECHNICAL MATERIEL CORPORATION to the user. This drawing is loaned for mutual assistance and is subject to recall at any time.

UNLESS OTHERWISE SPECIFIED DIMENSIONS ARE IN INCHES AND INCLUDE CHEMICALLY APPLIED OR PLATED FINISHES

DECIMALS .X ± .05 .XX ± .01 .XXX ± .005 TOLS. FRACTIONS 1/64 ANGLES 0° 30'

MATERIAL

FINISH

REQ'D	ITEM	PART NUMBER	DESCRIPTION	SYM.

LIST OF MATERIAL

FINAL APPROVAL BP	DATE	THE TECHNICAL MATERIEL CORP. MAMARONECK, NEW YORK
MECH. DES. JMS	DATE	
ELECT. DES. JMS	DATE	
CHECKED [illegible]	DATE 8-30-67	CAPACITOR VARIABLE, MIN. DISC CERAMIC
DRAWN H.G. G.S.	DATE 8/31/67	

SIZE	CODE IDENT. NO.	DWG NO.	ISSUE
B	82679	CV 112	I

SCALE SHEET OF

FCI-10-170 (10-66)