APPLICATION			REVISIONS						
QTY	MODEL USED ON	ASS'Y NO.	LTR	DESCRIPTION	DATE	E.M.N.NO	DRAFT	CHKD	APPD
12	HELA 10K	AF110	X	EXP. RELEASE	5/29/70		CE		
			0	ORIGINAL RELEASE	5/8/73		C.S.		

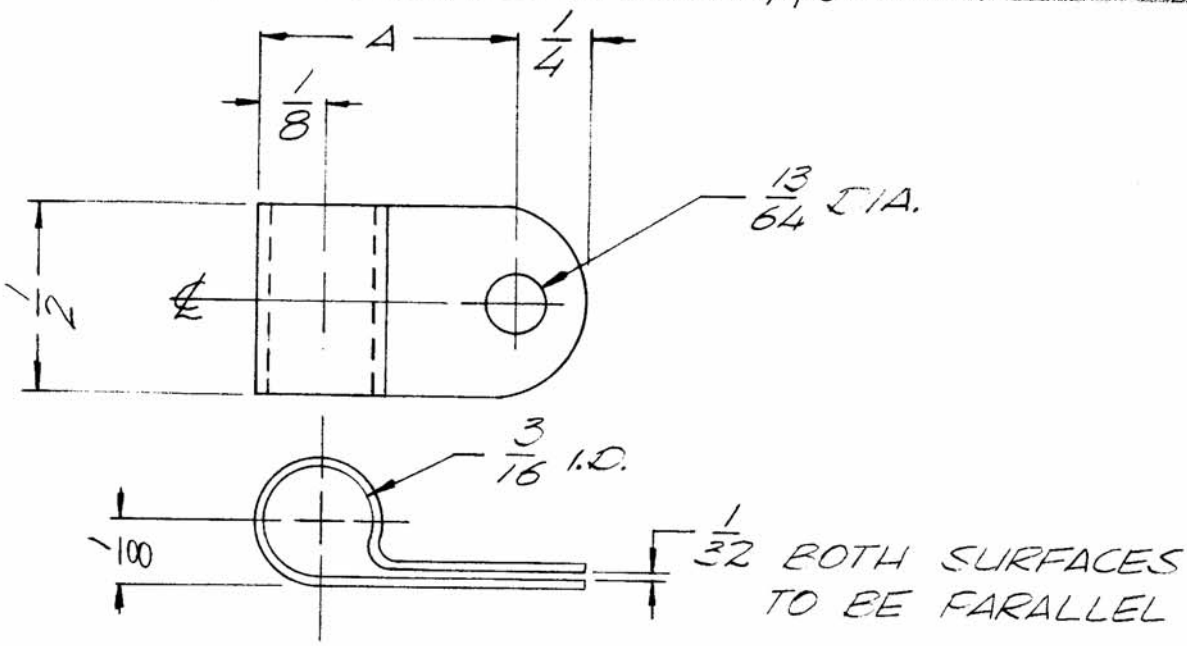

PART NO.	A
CU 169-1	7/16
CU 169-2	1/2
CU 169-3	9/16

UNLESS OTHERWISE SPECIFIED DIMENSIONS ARE IN INCHES AND INCLUDE CHEMICALLY APPLIED OR PLATED FINISHES

DECIMALS		FRACTIONS
.X ± .05	TOLS.	1/64
.XX ± .01		ANGLES
.XXX ± .005		0° ·30′

MATERIAL 1/32 THK. 1/2 HARD COPPER

FINISH S245 SIL. PLATE S433 SILVER KOTE

REQ'D	ITEM	PART NUMBER	DESCRIPTION	SYM.

LIST OF MATERIAL

FINAL APPROVAL CDB	DATE 5/29/70	THE TECHNICAL MATERIEL CORP. MAMARONECK, NEW YORK
MECH. DES.	DATE	
ELECT. DES.	DATE	CLAMP, COIL
CHECKED	DATE	
DRAWN EVANGELIST	DATE 5/29/70	

NOTICE TO PERSONS RECEIVING THIS DRAWING
THE TECHNICAL MATERIEL CORPORATION claims proprietary right in the material disclosed hereon. This drawing is issued in confidence for engineering information only and may not be reproduced or used to manufacture anything shown hereon without permission from **THE TECHNICAL MATERIEL CORPORATION** to the user. This drawing is loaned for mutual assistance and is subject to recall at any time.

SIZE	CODE IDENT. NO.	DWG NO.	ISSUE
A	82679	CU 169	0
SCALE NTS		SHEET OF	

FCI-10-170 (10-66)