THE CONTENTS OF THIS DRAWING ARE THE EXCLUSIVE PROPERTY OF THE TECHNICAL MATERIEL CORP. ITS UNAUTHORIZED USE OR REPRODUCTION IN WHOLE OR IN PART IS STRICTLY FORBIDDEN.

REQ. PER UNIT	USED ON MODEL	ASS'Y. NO.	DATE	
4	HFS-1		8-15-62	CU-140

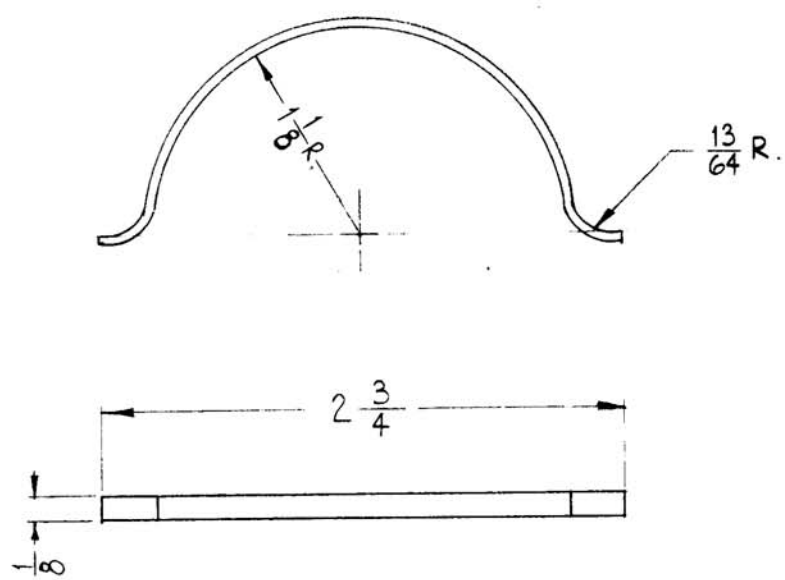

SYM	DESCRIPTION	DATE	CH. NO.	DRAFTS	CHECKER	ENG. APP.

UNLESS OTHERWISE SPECIFIED:
DIMENSIONS ARE IN INCHES
TOLERANCES ON
FRAC. ± 1/64 DEC. ± .005 ANGLES ± 1/2°

SCALE: DO NOT SCALE

MAXIMUM ALLOWABLE TOLERANCES HAVE BEEN DETERMINED AND ANY DEVIATIONS WILL BE CAUSE FOR REJECTION.
REMOVE ALL BURRS AND SHARP EDGES

REQ.	ITEM	PART NO.	STRUHER DESCRIPTION	SYMBOL
18 GA.			THE TECHNICAL MATERIEL CORP. MAMARONECK, NEW YORK	
STOCK SIZE				
STEEL			CLIP, WINDOW, RETAINING	
MATERIAL				
SPRING HARDENED			W.A.F.	[signature]
TYPE & TEMPER	HEAT TREAT. SPEC.		DRAWN	CHECKED
BLACK NICKEL			JMA	JMA
FINISH & SPEC. NO.			ELEC. DES. APP.	MECH. DES. APP.

FINAL APPROVAL: [signature]

CU-140

TMC FORM NO. 108-A

DEFIANCE NO. 1020 36845