THE CONTENTS OF THIS DRAWING ARE THE EXCLUSIVE PROPERTY OF THE TECHNICAL MATERIEL CORP. ITS UNAUTHORIZED USE FOR REPRODUCTION IN WHOLE OR IN PART IS STRICTLY FORBIDDEN.

REQ. PER UNIT	USED ON MODEL	ASS'Y. NO.	DATE	CR-38A/U	A
			11-2-62		

— SPECIFICATIONS —

HOLDER: HC-13/U (PER MIL-H-10056/4)
FREQ. RANGE = 16 TO 100 KC/SEC, INCL. (FOR SPECIFIC FREQ., SEE TMC PART No.)
O/A FREQ. TOL = ± 0.012 %
LOAD CAPACITANCE = 20.0 ± 0.5 μμf
MODE OF OSC. = FUNDAMENTAL
OPERATING TEMP. RANGE: $-40^{\circ}\,{}^{+0}_{-3^{\circ}}$ to $+70\,{}^{+3^{\circ}}_{-0}$ C.
RESONANCE TYPE: PARALLEL

— NOTE —

ALL OTHER SPECS. & REQUIREMENTS SHALL BE IN ACC/WITH MIL-C-3098/18

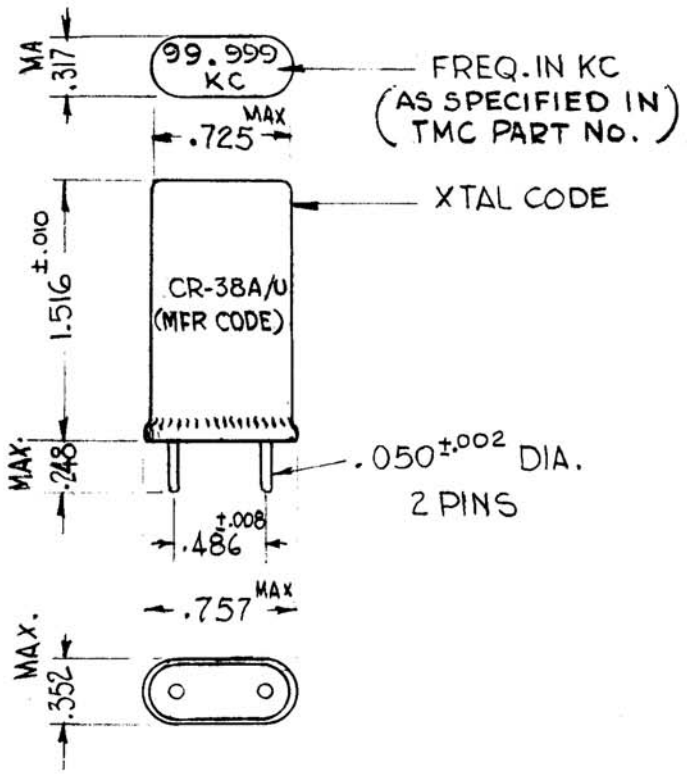

TMC PART No. SHALL BE IN THE FOLLOWING FORM

CR-38A/U — 100.000

TMC & MIL TYPE DESIGNATION — SPECIFIC FREQ. IN KC

UNIT TO BE IN ACC/WITH MIL-C-3098/18

SYM	DESCRIPTION	DATE	CH. NO.	DRAFTS	CHECKER	ENG. APP.
A	DIM. 1.516 ±.010 WAS 1.386 MAX.	4-11-63	8761	[illegible]	[illegible]	[illegible]

UNLESS OTHERWISE SPECIFIED DIMENSIONS ARE IN INCHES AND INCLUDE CHEMICALLY APPLIED OR PLATED FINISHES

SCALE

DECIMALS .X ±.05 .XX ±.01 .XXX ±.005 — TOLERANCES — FRACTIONS ± 1/64 ANGLES ± 0° 30′

CODE

REQ.	ITEM	PART NO.	STRUMER DESCRIPTION	SYMBOL

STOCK SIZE

MATERIAL

TYPE & TEMPER — HEAT TREAT. SPEC.

FINISH & SPEC. NO.

THE TECHNICAL MATERIEL CORP.
MAMARONECK. NEW YORK

CRYSTAL UNIT, QUARTZ

DRAWN	CHECKED	FINAL APPROVAL
G.D.L	[illegible]	[illegible]

ELEC. DES. APP.	MECH. DES. APP.	CR-38A/U	A
[illegible]	MP		