CP-110

TMC PART Nº	CATALOG NUMBER	A LENGTH ± 1/32	B DIA. ± .015	CAP. uf	VOLTAGE
CP-110-1	5ZC405N 20	1-13/16	3/4	4.0	200 V.D.C.

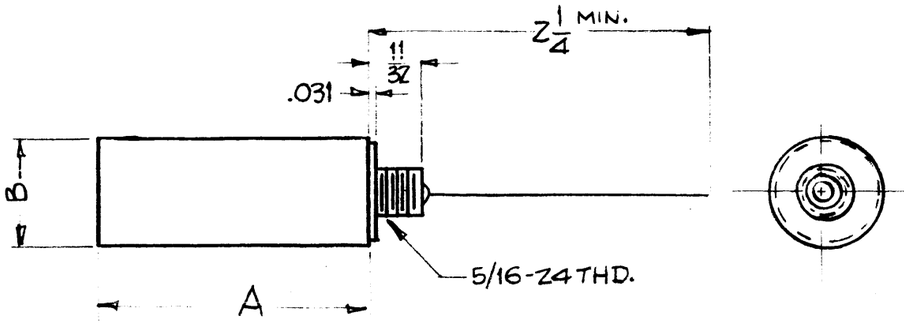

NOTE ~ LOCKWASHER & NUT FURNISHED W/EACH UNIT.

NOTICE TO PERSONS RECEIVING THIS DRAWING

THE TECHNICAL MATERIEL CORPORATION claims proprietary right in the material disclosed hereon. This drawing is issued in confidence for engineering information only and may not be reproduced or used to manufacture anything shown hereon without permission from THE TECHNICAL MATERIEL CORPORATION to the user. This drawing is issued for mutual assistance and is subject to recall at any time.

Property of:

THE TECHNICAL MATERIEL CORPORATION
MAMARONECK, NEW YORK

ISSUE	ITEM	CHANGED FROM	DATE	CH. NO.	DRAFTS	CHECKER	ENG. APP.

TOLERANCES

DEC. DIM. ±
FRAC. DIM. ±
ANGULAR DIM. ±

SCALE: S-401-112

MAXIMUM ALLOWABLE TOLERANCES HAVE BEEN DETERMINED AND ANY DEVIATIONS WILL BE CAUSE FOR REJECTION. REMOVE ALL BURRS AND SHARP EDGES

REQ. PER UNIT	MODEL	PROJECT NO.	ASS'Y. NO.	DATE
	AFC-1			8-9-60

USED ON

REQ.	ITEM	PART NO.	DESCRIPTION	SYMBOL
			THE TECHNICAL MATERIEL CORP. MAMARONECK. NEW YORK	
		STOCK SIZE	CAPACITOR, FIXED PAPER	
		MATERIAL		
		TYPE & TEMPER / HEAT TREAT. SPEC.	DRAWN / CHECKED / FINAL APPROVAL	
		FINISH & SPEC. NO.	ELEC. DES. APP. / MECH. DES. APP.	CP-110

FORM 109-A