STANDARD DRAWING

THE CONTENTS OF THIS DRAWING ARE THE EXCLUSIVE PROPERTY OF THE TECHNICAL MATERIEL CORP. ITS UNAUTHORIZED USE FOR REPRODUCTION IN WHOLE OR IN PART IS STRICTLY FORBIDDEN.

REQ. PER UNIT	USED ON MODEL	ASS'Y. NO.	DATE
			6-25-63
			6-25-63

CO 109 C

TMC PT NO.	MFG NO.	CAPACITANCE	VOLT RATING PEAK KV	AMPS-RMS CURRENT RATING	DIMENSIONS TYPICAL BOTH ENDS A	B	C	D	E	G	PICT	REQ.	
CC 109-1	CFEA	1000UUF	25KV	130	4.50	3.050	3.400	1/4-20	3.750	3 13/16	1	2	AX393
												1	AS124
CO 109-2	CFHA-200	200UUF	55KV	150	4.50	3.050	3.400	1/4-20	3.750	5 13/16	1	1	AX393
CO 109-3	CFDP2000	± 5 % 2000 PF	15KV	125	5.50	3.00	3.500	1/4-20	4.000	3.3	2		

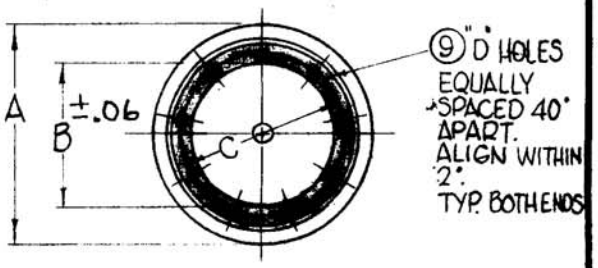

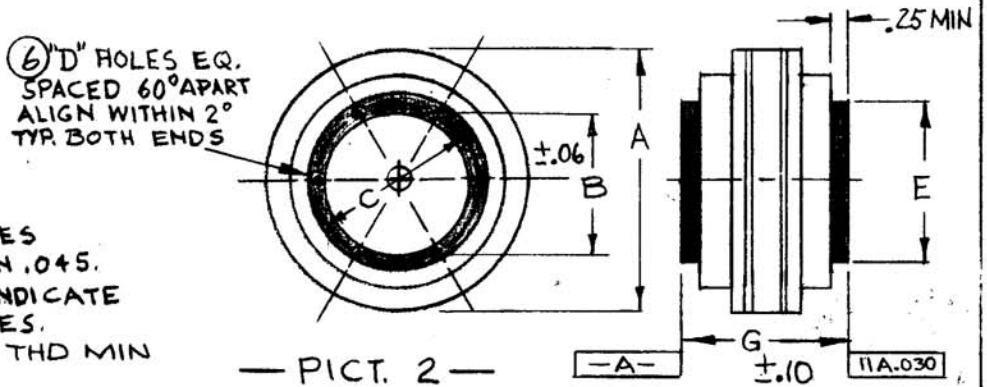

— PICT. 2 —

NOTE FOR PICT. 1 & 2:
1. BOTH ENDS OF HOLES CONCENTRIC WITHIN .045.
2. SHADED AREAS INDICATE CONTACT SURFACES.
3. HOLES TAPPED 7 THD MIN

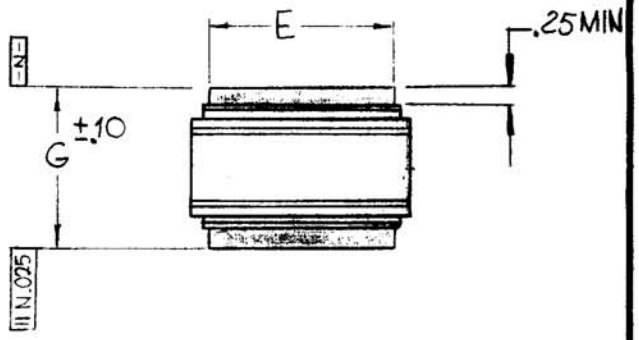

(REFER TO NOTES 1 & 2 ON PICT 2.)

— PICT. 1 —

SYM	DESCRIPTION	DATE	CH. NO.	DRAFTS	CHECKER	ENG. APP.
C	NOTE 3 ADDED; PT/No. CHART REV; DIM CLARIFIED	7.11.66	16529	WAW	JCB	JC
B	DIM. "F" ON -2 WAS 4 13/16 DIM "G" ON -2 WAS 5 3/4	1/4/66	15484	H.V.V.	JCB	aa
A	PICT. 2 ADD; CO-109-3 ADD; AMPS-RMS ADD. TO CURRENT RATE. COL.	5.6.65	13939	J.L.	JCB	[illegible]
O	ORIGINAL RELEASE FOR PRODUCTION	5-13-64	O	A.M.		

UNLESS OTHERWISE SPECIFIED DIMENSIONS ARE IN INCHES AND INCLUDE CHEMICALLY APPLIED OR PLATED FINISHES

SCALE

DECIMALS .X ±.1 .XX ±.03 .XXX ±.010 TOLERANCES FRACTIONS ± 1/32 ANGLES ± 1°

CODE C S401-48

REQ.	ITEM	PART NO.

STOCK SIZE

MATERIAL

TYPE & TEMPER | HEAT TREAT. SPEC.

FINISH & SPEC. NO.

F. BUDETTI DESCRIPTION SYMBOL

THE TECHNICAL MATERIEL CORP.
MAMARONECK. NEW YORK

CAPACITOR, FIXED VACUUM

DRAWN	CHECKED	FINAL APPROVAL
John C. Biele	aa	RDC

ELEC. DES. APP. | MECH. DES. APP. 4/13/64

CO 109 C