REQ. PER UNIT	USED ON MODEL	ASS'Y. NO.	DATE	CL373	B
1	RFTA-1		4.29.65		

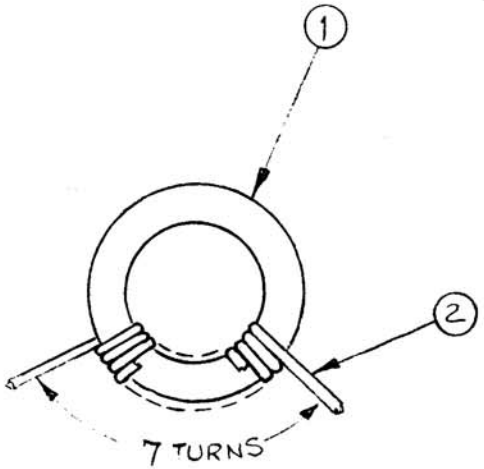

ELECTRICAL SPECIFICATIONS

L = 7 μh ± 10% AT 7.9 Mc

Q-MIN = 140

NOTE:

BOTH LEADS TO BE 4" LONG, STRIPPED & TINNED 1/2"

SYM	DESCRIPTION	DATE	CH. NO.	DRAFTS	CHECKER	ENG. APP.
B	"Q" MIN WAS 300. ADD STRIPPED & TINNED 1/2"	8-23-66	16778	RME	JCB	[illegible]
A	ON ELEC. SPEC. "L" WAS 14UH	7-5-66	16503	G.D.L	JCB	[illegible]
Ø	ORIGINAL RELEASE FOR PRODUCTION	4/20/66		CV		[illegible]
X4	7 TURNS WERE 14, LEADS WERE 1"	11-23-65	X4	[illegible]		[illegible]
X3	CI 128-4 WAS CI128-2	10-18-65	X3	[illegible]		[illegible]
X2	L WAS 65 μh Q WAS 30	6/3/65	X2	[illegible]	[illegible]	
X1	"L" TOL ADDED	5/10/65	X1	[illegible]	[illegible]	

REQ.	ITEM	PART NO.	DESCRIPTION	SYMBOL
X	3	GL130	Q-DOPE	
X	2	WI147-3	WIRE, ELEC., TEFLON	
1	1	CI128-4	CORE, FERRAMIC	

F. BUDETTI

STOCK SIZE: —"—

MATERIAL: —"—

TYPE & TEMPER: —"— HEAT TREAT. SPEC.: —"—

FINISH & SPEC. NO.: —"—

THE TECHNICAL MATERIEL CORP.
MAMARONECK. NEW YORK

COIL, RF

DRAWN: WB CHECKED: JCB FINAL APPROVAL: [illegible]

ELEC. DES. APP. MECH. DES. APP.

CL373 B

UNLESS OTHERWISE SPECIFIED
DIMENSIONS ARE IN INCHES AND INCLUDE CHEMICALLY APPLIED OR PLATED FINISHES

SCALE: DO NOT SCALE

DECIMALS .X ±.05 .XX ±.01 .XXX ±.005 — TOLERANCES — FRACTIONS ± 1/64 ANGLES ± 0° 30'

CODE: A

TMC FORM 108-A

ML 29

REPROVEL NO. 440H 23845