CL-267

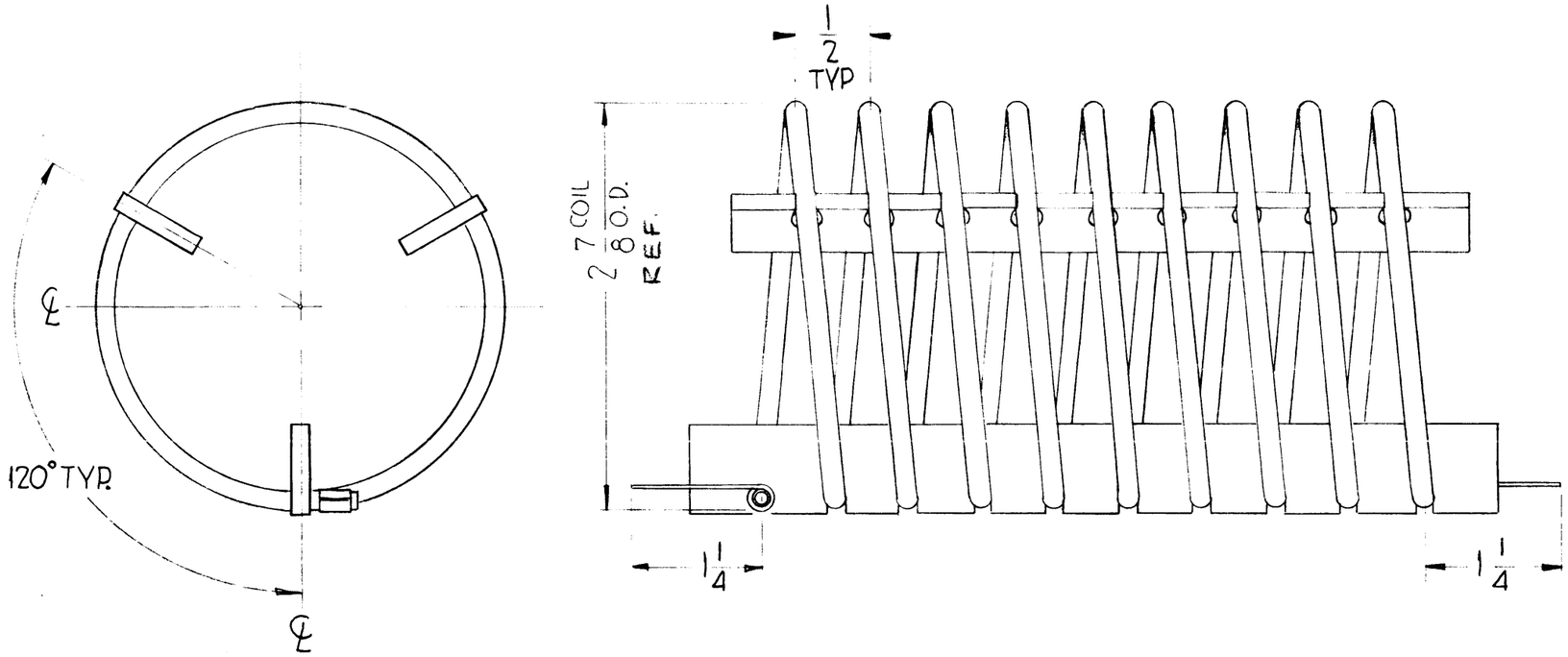

ELECTRICAL SPECIFICATIONS
3.32 uh ± 2%
Q = 350
FREQ. = 7.9 Mc

MECHANICAL SPECIFICATIONS
WOUND ON 2 1/2" DIA. FORM
FINISH: SILVER PLATE .0003 THK

[illegible] TO PERSONS [illegible] THIS DRAWING

THE TECHNICAL MATERIEL CORPORATION claims proprietary right in the material disclosed hereon. This drawing is issued in confidence for engineering information only and may not be reproduced or used to manufacture anything shown hereon without permission from THE TECHNICAL MATERIEL CORPORATION to the user. This drawing is loaned for mutual assistance and is subject to recall at any time.

Property of:

THE TECHNICAL MATERIEL CORPORATION
MAMARONECK, NEW YORK

SYM	DESCRIPTION	DATE	CH. NO.	DRAFTS	CHECKER	ENG. APP.

UNLESS OTHERWISE SPECIFIED:
DIMENSIONS ARE IN INCHES
TOLERANCES ON
FRACTIONS ± 1/64 DECIMALS ± .005 ANGLES ± 1/2°

SCALE: 2A-2056

MAXIMUM ALLOWABLE TOLERANCES HAVE BEEN DETERMINED AND ANY DEVIATIONS WILL BE CAUSE FOR REJECTION. REMOVE ALL BURRS AND SHARP EDGES

REQ. PER UNIT	MODEL	SECTION	ASS'Y. NO.	DATE
1	TER-3500-300			3-2-61

USED ON

REQ.	ITEM	PART NO.	DESCRIPTION	SYMBOL
			THE TECHNICAL MATERIEL CORP. MAMARONECK, NEW YORK	
STOCK SIZE			COIL, COMPENSATING	
MATERIAL				
TYPE & TEMPER	HEAT TREAT. SPEC.		DRAWN: D.J. Mann	CHECKER: [illegible]
FINISH & SPEC. NO.			ELEC. DES. APP.:	MECH. DES. APP.: aa

FINAL APPROVAL: [illegible]

CL-267

TMC FORM NO. 109

DEFIANCE NO. 1020 36352