REQ. PER UNIT	USED ON MODEL	ASS'Y. NO.	DATE	CL-222	D
8	GPT-40K	AP-102	3-4-60		

WIRE SIZE 16 AWG
WINDING - SINGLE LAYER
NO. OF TURNS 50
INSULATION - ENAMEL
CURRENT RATING 15 AMPS
FORM - 1/2 O.D. PHENOLIC (HOLLOW)
CORE - FERRAMIC

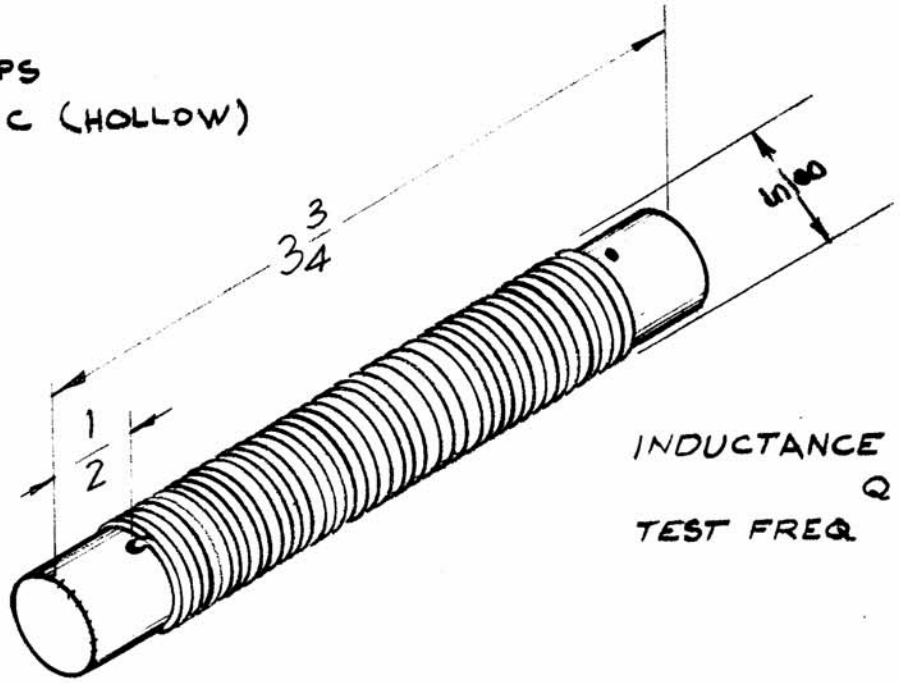

INDUCTANCE - 30.5 MICROHENRIES ± 10%
Q - 15 ± 10%
TEST FREQ - 2.5 MC

ISSUE	ITEM	CHANGED FR M	DATE	CH. NO.	DRAFTS	CHECKER	EN. APP.
D		ADDED ± 10% INDUCTANCE Q-WAS 35 OR GREATER	1-16-67	17676	L.A.K.	JCB	[illegible]
C		± 10% ADDED TO IND Q VALUE WAS 35	11/16/66	17273	LHW	JCB	JC
B	1	COIL INFORMATION NOTES ADDED	5-19-60	2273	[illegible]	JCB	[illegible]
A	2	30.[illegible] Q.35 [illegible]	4-5-60	1998	MF	[illegible]	[illegible]

TOLERANCES

DEC. DIM. ±
FRAC. DIM. ±
ANGULAR DIM. ±

SCALE: 2A-1838

MAXIMUM ALLOWABLE TOLERANCES HAVE BEEN DETERMINED AND ANY DEVIATIONS WILL BE CAUSE FOR REJECTION. REMOVE ALL BURRS AND SHARP EDGES

REQ.	ITEM	PART NO.	DESCRIPTION	SYMBOL
			THE TECHNICAL MATERIEL CORP. MAMARONECK, NEW YORK	
			COIL, RF, FIXED, INTERCONNECT	
			FILTER	

STOCK SIZE

MATERIAL

TYPE & TEMPER | HEAT TREAT. SPEC.

FINISH & SPEC. NO.

DRAWN: D J Mann | CHECKED: [illegible] | FINAL APPROVAL: [illegible] | [illegible]

ELEC. DES. APP | MECH. DES. APP

CL-222 D

FORM 108-A