CL-142

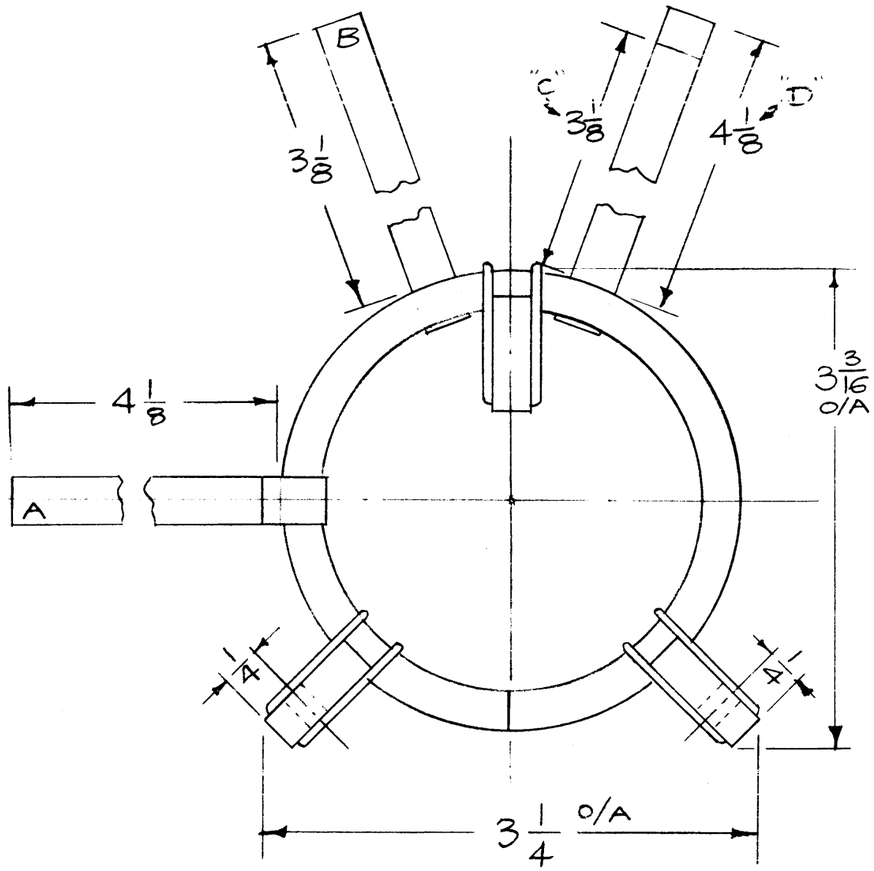

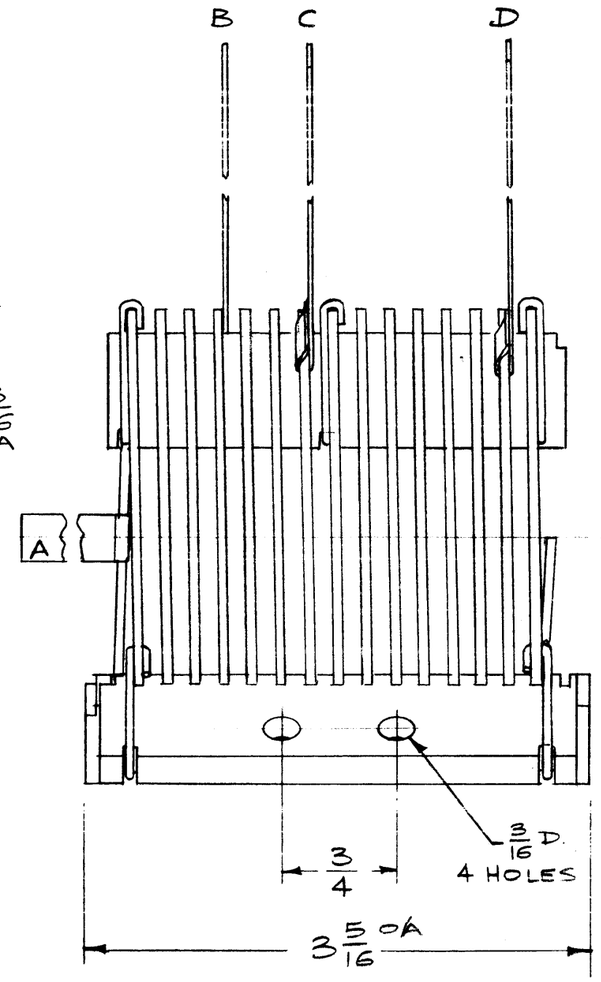

ELECTRICAL SPEC.

INDUCTANCE (TOTAL) - 10.9 μhy.

MECHANICAL SPEC.

COIL ID - 2 1/2" } 15 1/4 Turns.
COIL OD - 3"

TAP STRAPS - 5/16 Wide X .025 Thk Copper Strips.

FINISH - COIL & STRAPS - SILVER PLATE

SUPPORT BARS - GLASS BONDED MICA

NOTICE TO PERSONS RECEIVING THIS DRAWING

THE TECHNICAL MATERIEL CORPORATION claims proprietary right in the material disclosed hereon. This drawing is issued in confidence for engineering information only and may not be reproduced or used to manufacture anything shown hereon without permission from THE TECHNICAL MATERIEL CORPORATION to the user. This drawing is loaned for mutual assistance and is subject to recall at any time.

Property of:

THE TECHNICAL MATERIEL CORPORATION
MAMARONECK NEW YORK

ISSUE	ITEM	CHANGED FROM	DATE	CH. NO.	DRAFTS	CHECKER	ENG. APP.

TOLERANCES

DEC. DIM. ±
FRAC. DIM. ±
ANGULAR DIM. ±

SCALE:

4A1656

MAXIMUM ALLOWABLE TOLERANCES HAVE BEEN DETERMINED AND ANY DEVIATIONS WILL BE CAUSE FOR REJECTION.
REMOVE ALL BURRS AND SHARP EDGES

REQ. PER UNIT	MODEL	PROJECT NO.	ASS'Y. NO.	DATE
1	AC-100	RFB-1	A-1618	10-19-59

USED ON

REQ.	ITEM	PART NO.	DESCRIPTION	SYMBOL

STOCK SIZE

MATERIAL

TYPE & TEMPER | HEAT TREAT. SPEC.

FINISH & SPEC. NO.

THE TECHNICAL MATERIEL CORP.
MAMARONECK. NEW YORK

COIL, RF, FIXED, 10.9 μhy

DRAWN	CHECKED	FINAL APPROVAL
10/19/59		

ELEC. DES. APP.	MECH. DES. APP.	
		CL-142

FORM 109-A