CL-125

TMC NO.	NOM. IND. Hy.	INDUCTANCE BETWEEN TERM. 1 & 2 or 2 & 3	Q at 1 Kc MUST BE GREATER THAN	ITEM # 1	ITEM # 2	APPROX. TURNS BETWEEN TERM. 1 & 2	APPROX. TURNS BETWEEN TERM. 2 & 3	APPROX. LOAD TURNS BETWEEN TERMINALS 1 & 2	APPROX. LOAD TURNS BETWEEN TERMINALS 2 & 3
CL-125-4R0	4.0	0.99 to 1.01	30	C1-103-8	W1-123-37	2480	2480	155	182
CL-125-2R9	2.9	0.715 to 0.735	30	C1-103-8	W1-123-36	2100	2100	130	152
CL-125-0R96	.96	0.235 to 0.245	30	C1-103-8	W1-123-34	1215	1215	76	88
CL-125-0R5	.50	0.124 to 0.126	30	C1-103-8	W1-123-33	875	875	55	64

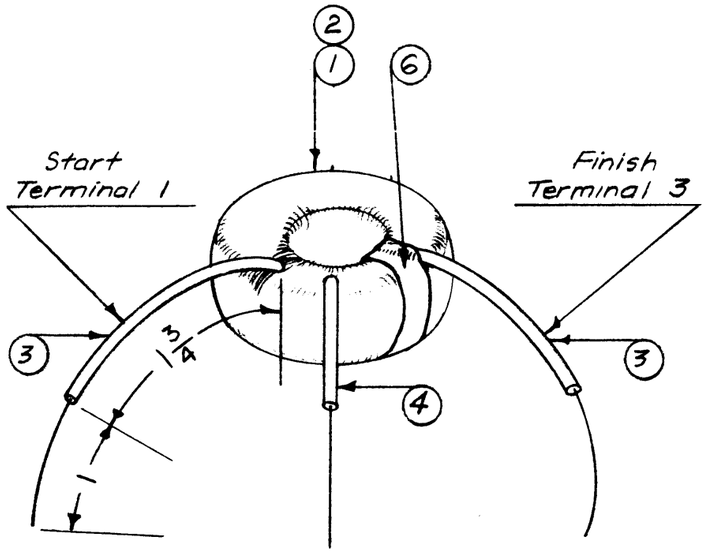

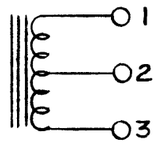

PROCEDURE

1. Wind required No. of turns between terminals 1 & 2.
2. Bake for 1/2 hour at 215 degrees F.
3. Submerge hot coil in GL-110. (item 5)
4. Measure inductance, using inductance bridge General Radio Model 650A. Remove necessary turns until inductance complies with above chart.
5. Wind required No. of turns between terminals 2 & 3.
6. Bake for 1/2 hour at 215 degrees F.
   Note: Temp. must not be lower than 212 degrees F. and not higher than 220 degrees F.
7. Submerge hot coil in GL-110. (item 5)
8. Repeat step No. 4.
9. Tape item 3 to coil with item 6, as shown.
10. Cool coil for 1 hour at room temp. Remove 1 in. of enamel insulation as shown. Submerge coil in GL-110 (item 5)
    Note: Final dip must not exceed two seconds.

NOTICE TO PERSONS RECEIVING THIS DRAWING

THE TECHNICAL MATERIEL CORPORATION claims proprietary right in the material disclosed hereon. This drawing is issued in confidence for engineering information only and may not be reproduced or used to manufacture anything shown hereon without permission from THE TECHNICAL MATERIEL CORPORATION to the user. This drawing is loaned for mutual assistance and is subject to recall at any time.

Property of:

THE TECHNICAL MATERIEL CORPORATION
MAMARONECK, NEW YORK

REQ.	ITEM	PART NO.	DESCRIPTION	SYMBOL
X	6	TA-102-2	Tape, Paper	
X	5	GL-110	Compound, Potting	
2"	4	PX-104-1-.022	Insulation, Sleeving	BLK.
4"	3	PX-104-2-.022	Insulation, Sleeving	Yel.
X	2	W1-	Wire, Magnet	
X	1	C1-	Core, Toroid	

See Chart

STOCK SIZE	ff
MATERIAL	ff
TYPE & TEMPER	ff
HEAT TREAT. SPEC.	ff
FINISH & SPEC. NO.	ff

THE TECHNICAL MATERIEL CORP.
MAMARONECK. NEW YORK

TRANSFORMER, A.F.
TOROIDAL

DRAWN	CHECKED	FINAL APPROVAL
2-11-57		A. J. J.
ELEC. DES. APP.	MECH. DES. APP.	

CL-125

CL-125-4R0

TMC NO. — INDUCTANCE (hy.)

Note - Letter "R", if used, shall indicate decimal point.
(Example - CL-125-4R0 = 4.0 hy)

ISSUE	ITEM	CHANGED FROM	DATE	CH. NO.	DRAFTS	CHECKER	ENG. APP.

TOLERANCES

DEC. DIM. ±
FRAC. DIM. ±
ANGULAR DIM. ±

SCALE:

MAXIMUM ALLOWABLE TOLERANCES HAVE BEEN DETERMINED AND ANY DEVIATIONS WILL BE CAUSE FOR REJECTION.
REMOVE ALL BURRS AND SHARP EDGES

REQ. PER UNIT	MODEL	PROJECT NO.	ASS'Y. NO.	DATE

USED ON

FORM - 109 - A