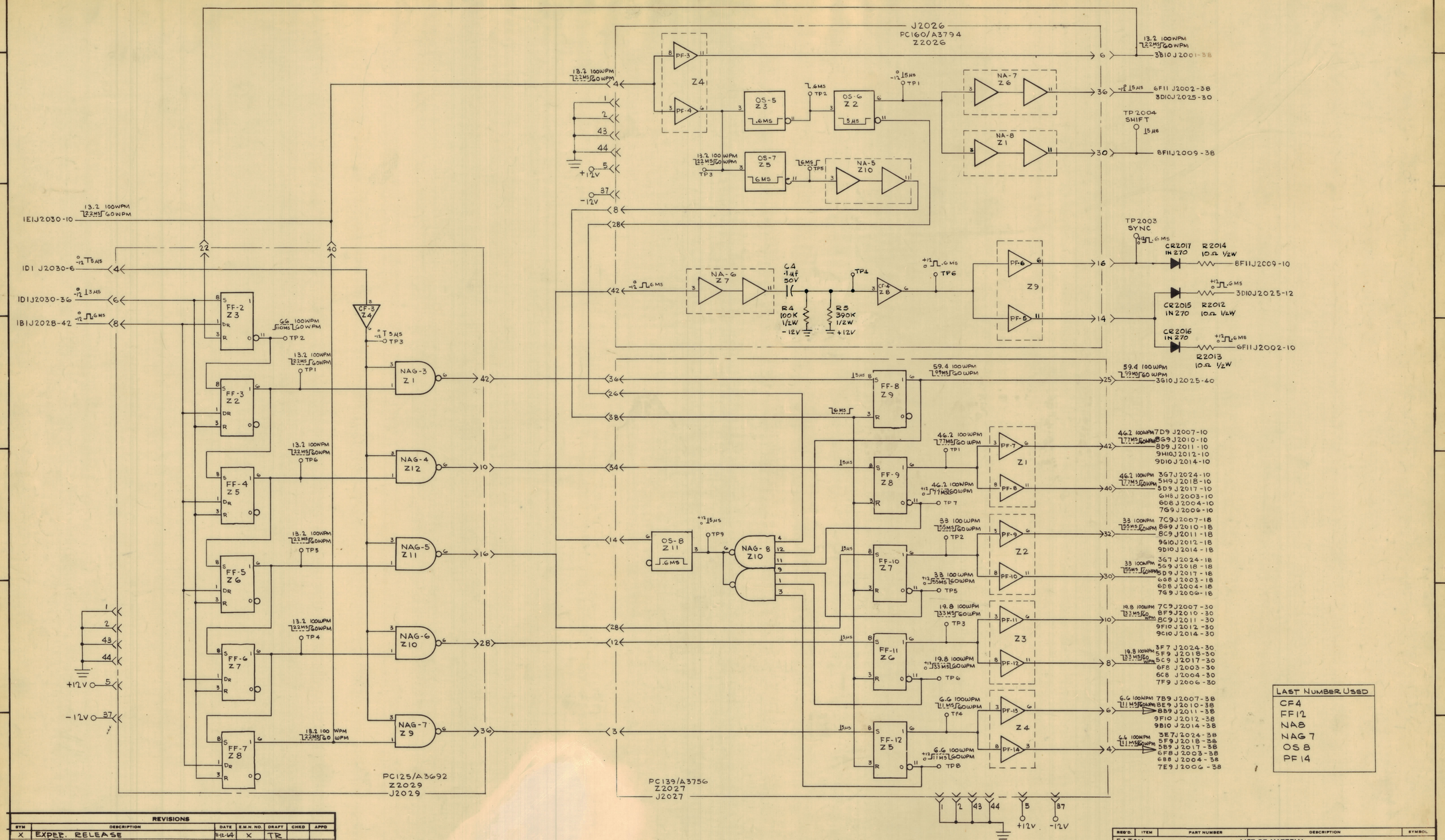

LAST NUMBER USED
CF4
FF12
NA8
NAG 7
OS 8
PF 14

REVISIONS

SYM	DESCRIPTION	DATE	E.M.N. NO.	DRAFT	CHKD	APPD
X	EXPER. RELEASE	11-12-64	X	TR		
Ø	ORIGINAL RELEASE FOR PRODUCTION	2-5-65		HLA		
A	SEE SHEETS 7, 8, & 9 OF 9 REV. "A".	3-19-65	13603	G.L.		
B	ON Z9 PF-5 & PF-6 REVERSED & #6, 11 ADDED - NOS 14 & 16 REVERSED NO 30 WAS 34 - R5, R4, C4 Y SYMBOLS FOR DIODES Y RESISTORS ADDED - SEE SHEET 1 & SHEETS 3 THRU 9	6-4-65	14180	G.D.L		
C	SEE SHEETS 7, 8 & 9	11-9-65	15109			
D	SEE SH. 1 OF 9 REV. "D"	5-10-66	16236	HLA		

REQ'D.	ITEM	PART NUMBER	DESCRIPTION	SYMBOL

EATON — LIST OF MATERIAL

MATERIAL

FINISH

THE TECHNICAL MATERIEL CORP.
MAMARONECK, NEW YORK

TITLE: DIAGRAM, LOGIC, DETAILED RTIA-1

UNLESS OTHERWISE SPECIFIED DIMENSIONS ARE IN INCHES AND INCLUDE CHEMICALLY APPLIED OR PLATED FINISHES

DECIMALS .X ± .05, .XX ± .01, .XXX ± .005 — TOLERANCES — FRACTIONS ± 1/64, ANGLES ± 0° 30'

DRAWN T. RAMIREZ	DATE 11-12-64	FINAL APPROVAL	DATE
CHECKED H. SIMMONS	DATE 2/8/65		
ELECT. DES.	DATE 2/5/65	CK807	D
MECH. DES.	DATE	SHEET 2 OF 9	REV. LTR.