REQ. PER UNIT	USED ON MODEL	ASS'Y. NO.	DATE	CK-663	D
	TTRT-3				

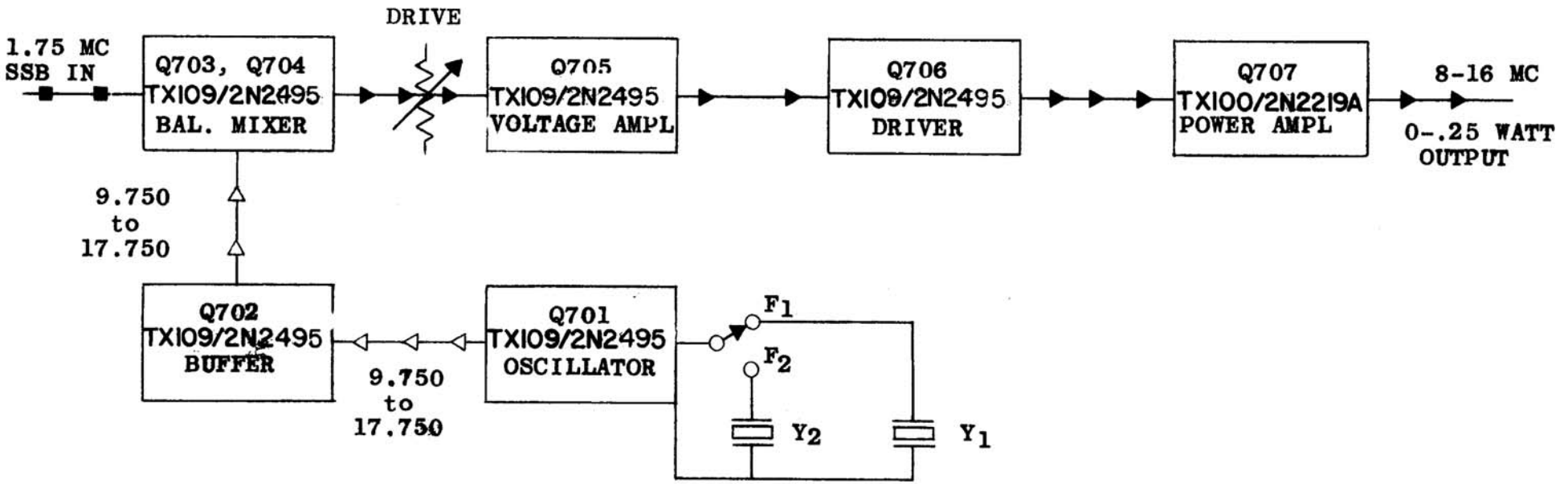

-12 VDC to Q701 thru Q706
+12 VDC to Q705 and Q706
-40 VDC to Q707

INTERMEDIATE FREQUENCY - 1.75 MC
R. F. FREQUENCY - 8-16 MC
INJECTION FREQUENCY - 9.750-17.750 MC

SYM	DESCRIPTION	DATE	CH. NO.	DRAFTS	CHECKER	ENG. APP.
D	ALL 2N2945 WERE 2N2946	11/2/65	15092	[illegible]	JCB	[illegible]
C	ALL 2N2496 WERE 2N2084 OR 2N2495	10/7/65	14937	[illegible]	JL	
B	TX109 ADD. TO 2N2084 (3 PL.); TX104 ADD. TO 2N2495 (2 PL.); TX100/2N2219A WAS 2N2219 (1 PL.)	4.21.65	13897	JL	JCB	[illegible]
A	"DRIVE" SYM. RELOCATED ON "Q705&6" 2N2495 WAS 2N2084	5-1-64	11341	WB	JCB	[illegible]

UNLESS OTHERWISE SPECIFIED
DIMENSIONS ARE IN INCHES AND INCLUDE CHEMICALLY APPLIED OR PLATED FINISHES

SCALE

DECIMALS .X ±.05 .XX ±.01 .XXX ±.005 — TOLERANCES — FRACTIONS ± 1/64 ANGLES ± 0° 30′

CODE A

REQ.	ITEM	PART NO.	DESCRIPTION	SYMBOL
			KAHN/PALMER	

STOCK SIZE

MATERIAL

TYPE & TEMPER | HEAT TREAT. SPEC.

FINISH & SPEC. NO.

THE TECHNICAL MATERIEL CORP.
MAMARONECK, NEW YORK

BLOCK DIAGRAM, XMTR CONVERTER

TTRT-3, 8-16 MC

DRAWN	CHECKED	FINAL APPROVAL
R. [illegible]	[illegible] 12/24/63	BP

ELEC. DES. APP.	MECH. DES. APP.	CK-663	D
WAP 1/6/64	RK		

TMC FORM 108-A

STOCK NO. 440H