SYM	DESCRIPTION	DATE	E.M.N. NO.	DRAFT	CHKD	APPD
A	R182 WAS 22K ADDED [illegible] SYMBOLS TO [illegible] DWG. C256 WAS .1	1/17/64	10733		@	
B	EXTENSIVE CHANGES SEE EMN"	3-12-64	11052	AM	@	
C	L101 6.5H WAS 8H, DS101 THRU DS105 AND FL101 REARRANGED	5.15.64	11355	JJB	@	
D	R106 WAS 1MEG., C223 DELE., R207 WAS 68 R224, 15K ADD., ON LAST SYMB. R224 WAS R223 ON MISSING SYMB. C223 ADDED	6.16.64	11588	JJB		
E	ON S102 G REAR: TERM. SHOWN AS CONT. WIPER ON S102 G REAR: WIPER ON TERM. 5 CHG. TO CONTACT C145 DELE., ON S102 D FRONT: TERM. 3 SHOWN AS CONT. WIPER NOTE "S102 SHOWN IN POSITION 1" ADDED	8.6.64	12068	JJB	@	
F	ON PICT. "FL102" REVISED.	10-23-64	12708	J.L.	@	
G	ON PICT: VAL. OF C217 WAS 330PF (ZONE C7)	12-16-64	12917	J.L.	@	
H	ON PICT: "REC MUTE" ADD. TO E101 & PIN 10; CONN. BET. E101, PIN 10; & R175 ADD. WITH MARKING "+105 SCREENS"; CONN. FR. "3B, S105 TO "+105" LINE WAS TO "+105 SCREENS"; ON S104: C134 DELETED; CONN. BET. R110 & GND. WAS RELOC. FR. R110 & S104; CONN. BET. S104 PIN 1, & S103 PIN 2, AND CONN. BET. S103 PIN 2, & R103, DELETED; TP74 ON V102 WAS TP74 WAS TP71-72.	2/25/65	13534	J.L.		

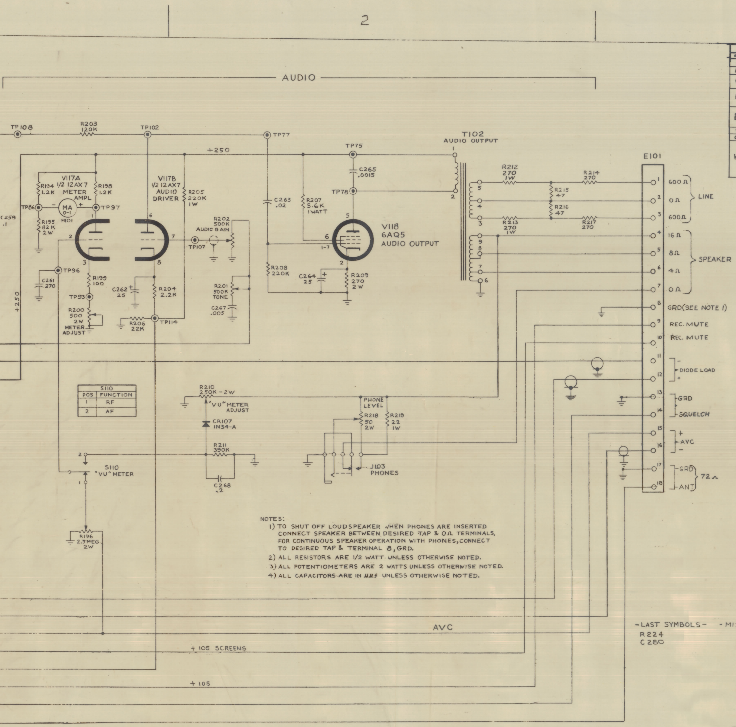
2
1
AUDIO
TP108
R203 120K
TP102
TP77
+250
V117A 1/2 12AX7 METER AMPL
R194 1.2K
R198 1.2K
TP86
MA 0-1 M101
TP97
R195 82K 2W
C258 .1
C261 270
TP96
R199 100
TP93
R200 500 2W METER ADJUST
V117B 1/2 12AX7 AUDIO DRIVER
R205 220K 1W
C262 25
R204 2.2K
R206 22K
TP114
TP107
R202 500K AUDIO GAIN
R201 500K TONE
C267 .005
C263 .02
R207 5.6K 1WATT
R208 220K
TP75
C265 .0015
TP78
V118 6AQ5 AUDIO OUTPUT
C264 25
R209 270 2W
T102 AUDIO OUTPUT
R212 270 1W
R213 270 1W
R214 270
R215 47
R216 47
R217 270
E101
600Ω
0Ω
600Ω
LINE
16Ω
8Ω
4Ω
0Ω
SPEAKER
GRD(SEE NOTE 1)
REC. MUTE
REC. MUTE
DIODE LOAD
GRD
SQUELCH
AVC
GRD
ANT
72Ω
R210 250K - 2W "VU" METER ADJUST
CR107 1N34-A
R211 390K
C268 .2
PHONE LEVEL
R218 50 2W
R219 22 1W
J103 PHONES
S110 "VU" METER
R196 2.5MEG 2W
AVC
+105 SCREENS
+105
D
C
B
A
3

S110	
POS	FUNCTION
1	RF
2	AF

NOTES:
1) TO SHUT OFF LOUDSPEAKER WHEN PHONES ARE INSERTED CONNECT SPEAKER BETWEEN DESIRED TAP & 0Ω TERMINALS, FOR CONTINUOUS SPEAKER OPERATION WITH PHONES, CONNECT TO DESIRED TAP & TERMINAL 8, GRD.
2) ALL RESISTORS ARE 1/2 WATT UNLESS OTHERWISE NOTED.
3) ALL POTENTIOMETERS ARE 2 WATTS UNLESS OTHERWISE NOTED.
4) ALL CAPACITORS ARE IN μμf UNLESS OTHERWISE NOTED.

-LAST SYMBOLS-	-MISSING SYMBOLS-
R224	L104
C280	C223
	C145
	C134
	TP71-72

REQ'D.	ITEM	PART NUMBER	DESCRIPTION	SYMBOL
M. GELLMAN		LIST OF MATERIAL		

MATERIAL

FINISH

THE TECHNICAL MATERIEL CORP.
MAMARONECK, NEW YORK

TITLE
SCHEMATIC DIAGRAM
GPR-92

UNLESS OTHERWISE SPECIFIED
DIMENSIONS ARE IN INCHES AND INCLUDE
CHEMICALLY APPLIED OR PLATED FINISHES

DECIMALS .X ± .05 .XX ± .01 .XXX ± .005
TOLERANCES
FRACTIONS ± 1/64 ANGLES ± 0° 30'

DRAWN N. Peter — DATE 2/5/62
CHECKED — DATE
ELECT. DES. — DATE
MECH. DES. — DATE
FINAL APPROVAL — DATE
SHEET CK-500
REV. LTR H

27 SQ FEET

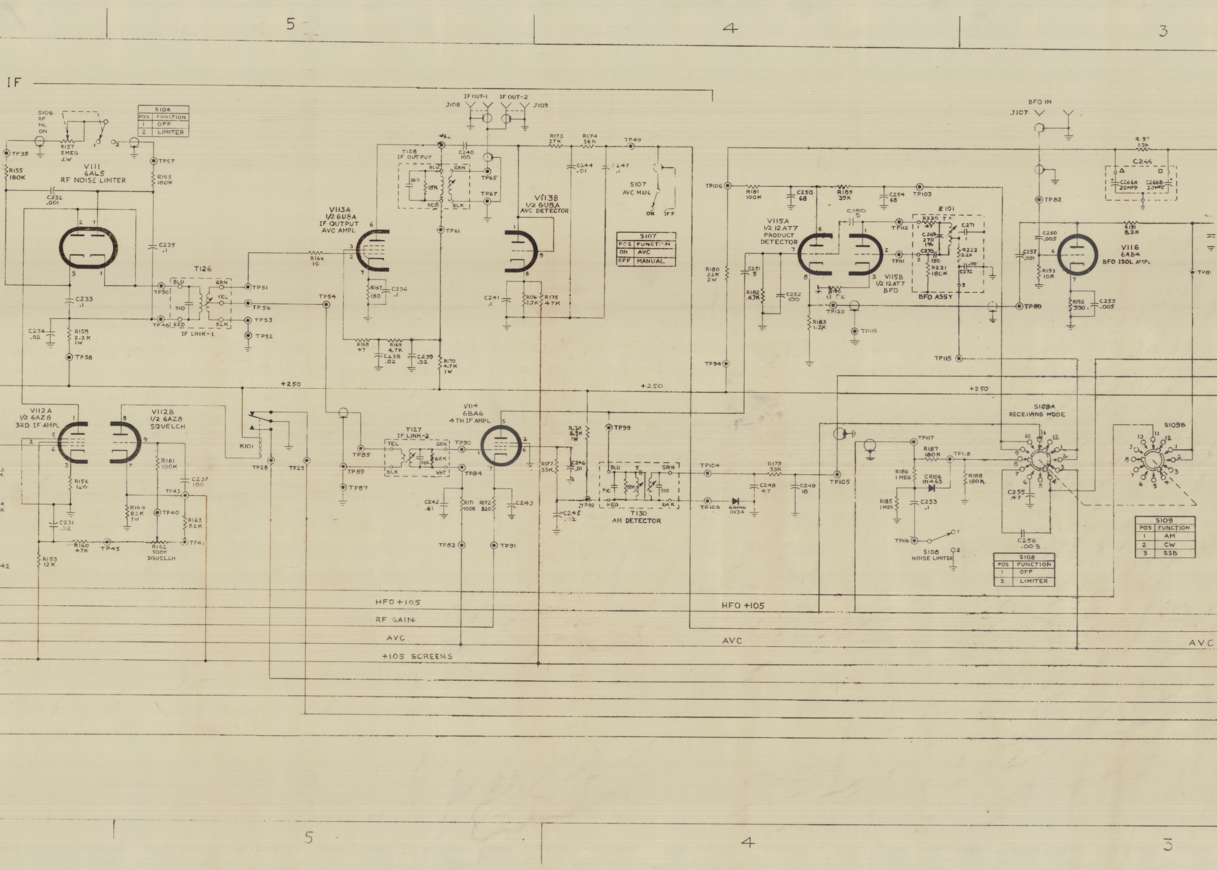
5
4
3
IF
S106
RF
NL
ON
POS FUNCTION
1 OFF
2 LIMITER
TP35
R155 180K
R157 5MEG 2W
V111 6AL5 RF NOISE LIMTER
TP57
R165 180K
C232 .001
C235 .1
T126
BLU
GRN
YEL
RED
BLK
510
TP50
TP48
TP51
TP56
TP53
TP52
IF LINK-1
C233 .1
C234 .02
R158 2.2K 1W
TP58
V112A 1/2 6AZ8 3RD IF AMPL
V112B 1/2 6AZ8 SQUELCH
R156 120
C231 .02
R153 12K
R160 47K
TP45
R161 100K
R164 82K 1W
TP40
TP43
C237 100
R163 82K
TP41
R162 500K SQUELCH
K101
TP28
TP29
+250
R166 10
TP54
V113A 1/2 6U8A IF OUTPUT AVC AMPL
R167 180
C236 .1
R168 47
R169 4.7K
C238 .02
C239 .02
R170 4.7K 1W
T128 IF OUTPUT
360
18K
TP61
TP65
TP67
C240 100
IF OUT-1
IF OUT-2
J108
J109
V113B 1/2 6U8A AVC DETECTOR
C241 .1
R176 2.7K
R175 47K
R173 27K
R174 56K
C244 .01
C247 .1
TP49
S107 AVC MAN.
ON OFF
S107
POS FUNCTION
ON AVC
OFF MANUAL
T127 IF LINK-2
YEL
GRN
BLK
WHT
68K
TP85
TP89
TP87
TP90
TP84
V114 6BA6 4TH IF AMPL
C242 .01
R171 100K
R172 220
C243
TP83
TP91
R178 8.2K 1W
TP99
C246 .01
R177 33K
C245 .02
TP92
T130 AM DETECTOR
33K
TP104
TP100
IN34
R179 33K
C248 47
C249 18
TP105
HFO +105
RF GAIN
AVC
+105 SCREENS
TP106
R181 100K
C250 68
R189 39K
C254 68
TP103
R180 22K 2W
TP94
V115A 1/2 12AT7 PRODUCT DETECTOR
C251 5
R182 47K
C252 100
C290 5
V115B 1/2 12AT7 BFO
R190
R183 1.2K
TP120
TP119
TP112
TP111
Z101
R220 47
C269 270 1%
C270
150
R221 180K
R222 2.2K
C271
C272 .001
BFO ASSY
TP115
TP80
BFO IN
J107
TP82
C260 .005
C257 .001
R193 10K
V116 6AB4 BFO ISOL AMPL
R191 8.2K
R192 330
C259 .005
R 97 10K
C266
C266A 20MFD
C266B 20MFD
TP81
S109A RECEIVING MODE
S109B
TP117
R187 180K
TP118
R188 180K
R186 1MEG
CR106 IN463
R185 1MEG
C253 .1
C255 .47
C256 .003
TP116
S108 NOISE LIMITER
S108
POS FUNCTION
1 OFF
2 LIMITER
S109
POS FUNCTION
1 AM
2 CW
3 SSB

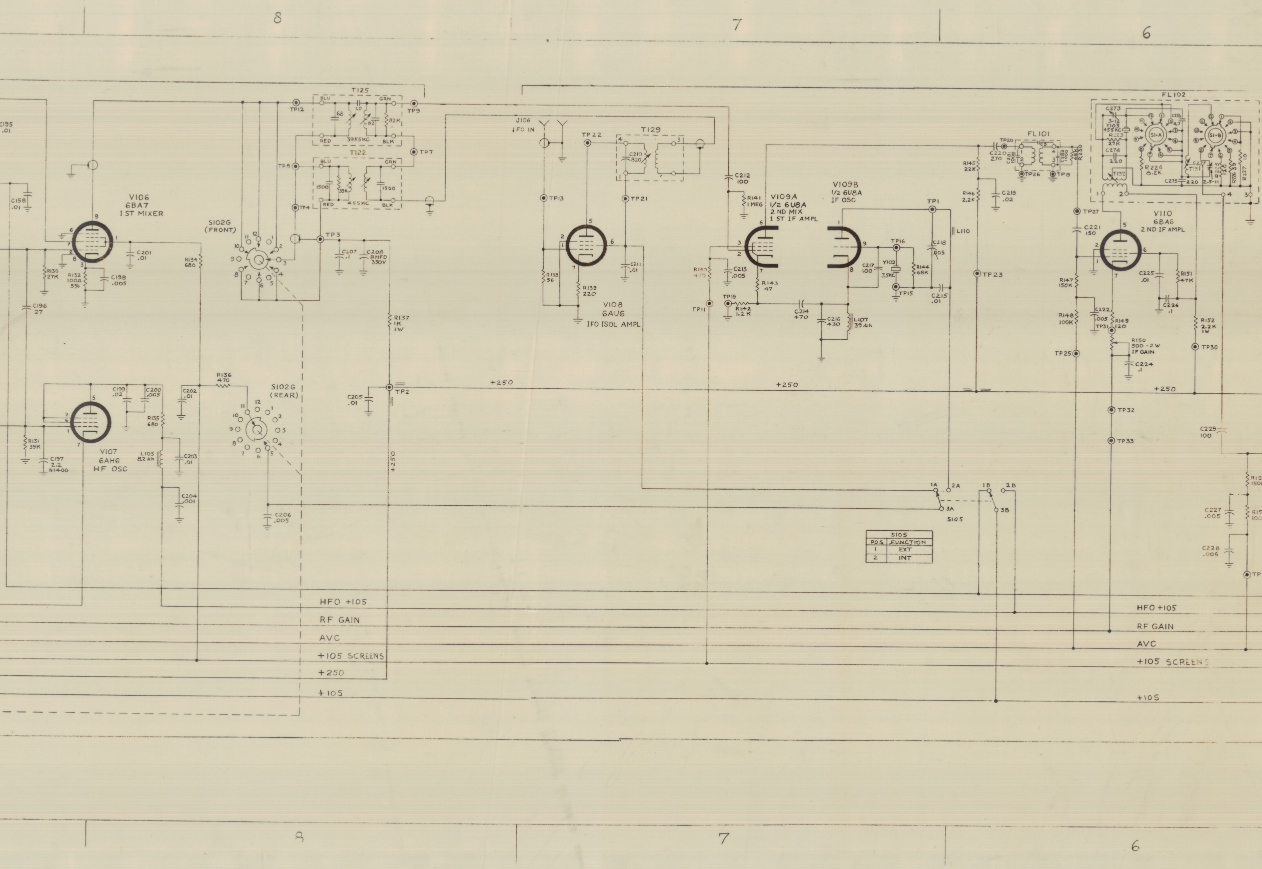
8
7
6
C195
.01
C158
.01
V106
6BA7
1 ST MIXER
C201
.01
R130
27K
R132
100Ω
5%
C198
.005
C196
27
R134
680
V107
6AH6
HF OSC
R131
39K
C197
2.2
N1400
C199
.02
C200
.005
R135
680
L105
8.2 uh
C202
.01
C203
.01
C204
.001
S102G
(FRONT)
S102G
(REAR)
R136
470
C206
.005
T125
BLU
GRN
68
1.0
82
82K
RED
3955KC
BLK
T122
BLU
GRN
1500
33K
1500
RED
455KC
BLK
TP12
TP9
TP7
TP8
TP4
TP3
C207
.1
C208
8MFD
350V
R137
1K
1W
C205
.01
TP2
+250
J106
IFO IN
TP22
TP13
T129
C210
820
TP21
V108
6AU6
IFO ISOL AMPL
R138
56
R139
220
C211
.01
C212
100
R141
1MEG
V109A
1/2 6U8A
2 ND MIX
1 ST IF AMPL
R140
470
C213
.005
R143
47
TP19
R142
1.2K
TP11
C214
470
V109B
1/2 6U8A
IF OSC
C217
100
Y102
3.5MC
TP16
R144
68K
TP15
TP1
C218
.005
L110
C215
.01
C216
430
L107
39.4h
R145
22K
R146
2.2K
C219
.02
TP23
TP20
C220
270
FL101
C281
1000
C3
C282
1000
68K
R230
TP26
TP19
FL102
C273
3-12
Y103
455KC
R223
27K
C274
220
S1-A
S1-B
C276
4.7
R224
8.2K
T132
T131
C277
2.5-11
C275
220
R225
120
R226 39
R227
10
TP27
C221
150
V110
6BA6
2 ND IF AMPL
R147
150K
R148
100K
TP25
C222
.005
TP31
R149
120
R150
500 - 2W
IF GAIN
C224
.1
C225
.01
R151
47K
C226
.1
R152
2.2K
1W
TP30
TP32
TP33
C229
100
R15
150
R15
100
C227
.005
C228
.005
TP
1A
2A
3A
1B
2B
3B
S105
HFO +105
RF GAIN
AVC
+105 SCREENS
+250
+105

S105	
POS.	FUNCTION
1	EXT
2	INT

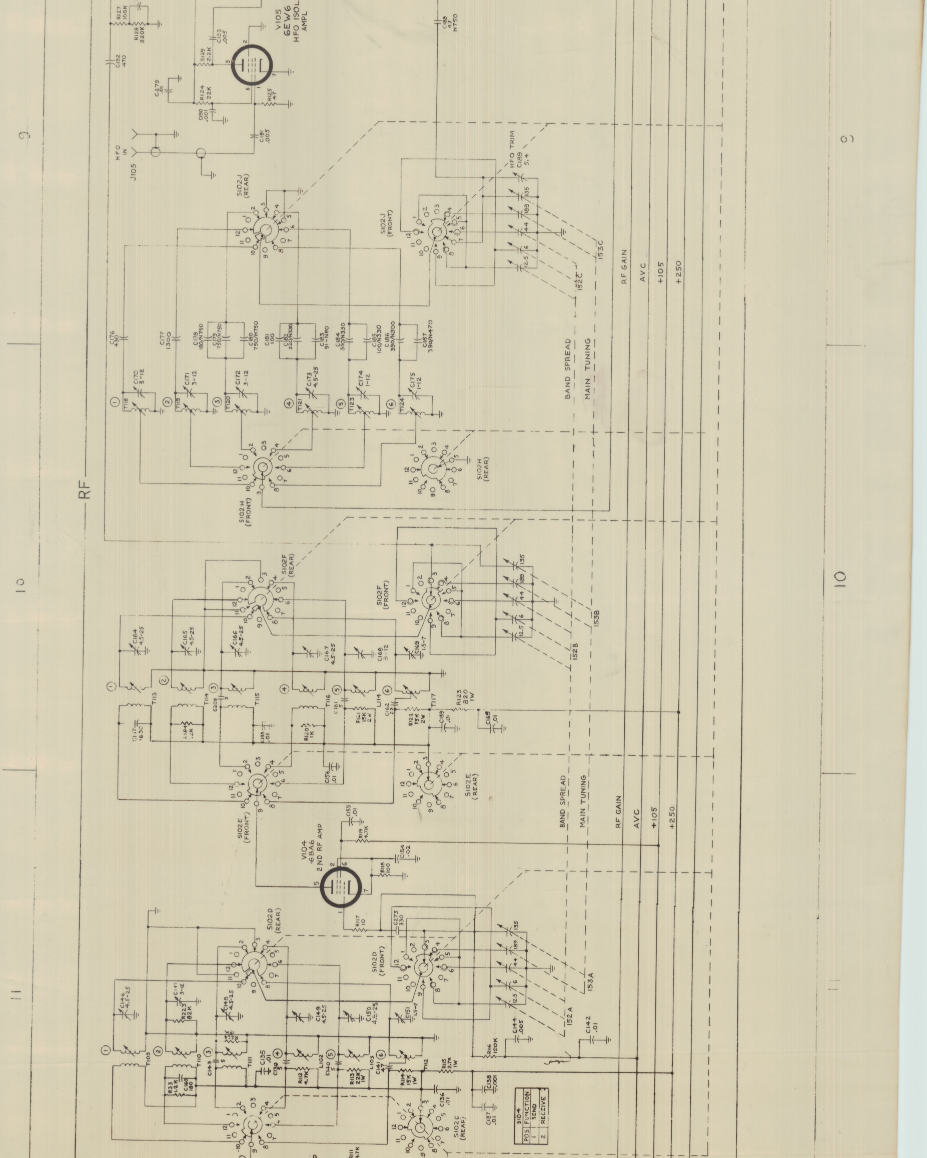
RF
9
10
11
V105
6EW6
HFO ISOL AMPL
HFO IN
J105
V104
6BA6
2ND RF AMP
S102J (REAR)
S102J (FRONT)
S102H (FRONT)
S102H (REAR)
S102F (REAR)
S102F (FRONT)
S102E (FRONT)
S102E (REAR)
S102D (REAR)
S102D (FRONT)
S102C (REAR)
HFO TRIM C189 5.4
C188 47 N750
C176 430
C177 1300
C178 180/N750
C179 750/N750
C180 750/N750
C181 100
C182 220/N330
C183 91-NPO
C184 350/N330
C185 100/N330
C186 390/N300
C187 390/N470
C170 3-12
C171 3-12
C172 3-12
C173 4.5-25
C174 1-12
C175 1-12
T118
T119
T120
T121
T123
T124
C164 4.5-25
C165 4.5-25
C166 4.5-25
C167 4.5-25
C168 3-12
C169 1.5-7
T113
T114
T115
T116
T117
L114
C209 3
C117 1630
R184 1.2K
C135 .01
R120 1K
C161 5
R121 15K 2W
C162 22
R122 15K 2W
C159 .01
C165 .01
R123 820 1W
C156 .01
C155 .01
R119 4.7K
C154 .02
R118 100
R117 10
C273 330
C146 4.5-25
C147 3-12
R223 82K
C148 4.5-25
C149 4.5-25
C150 4.5-25
C151 1.5-7
T109
T110
T111
T112
L102
L103
C143 5
C139 3
C135 .01
R112 4.7K
C140 5
R113 22K 1W
C141 47
R114 15K 1W
R115 27K 1W
R116 120K
C144 .005
C142 .01
C138 .001
C136 .01
C137 .01
R33 1.2K
C160 180
R111 4.7K
C192 470
R127 100K
R128 220K
C123 .005
R129 2.2K
C279 .01
R124 22K
R125 47
C190 .001
C191 .005
12.5
6
44
189
135
152A
153A
152B
153B
152C
153C
BAND SPREAD
MAIN TUNING
RF GAIN
AVC
+105
+250

S104	
POS	FUNCTION
1	SEND
2	RECEIVE

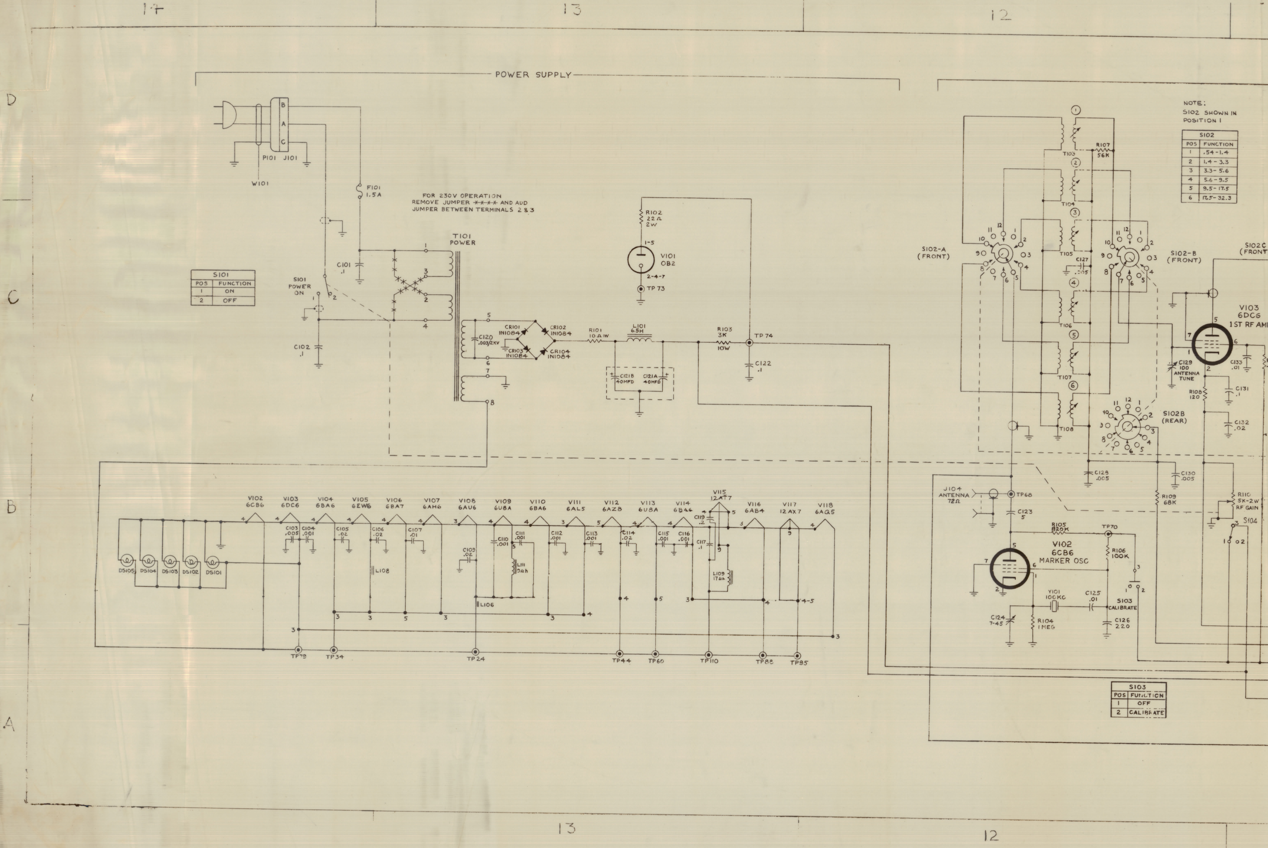
14
13
12
D
C
B
A
POWER SUPPLY
P101
J101
W101
B
A
C
F101
1.5A
FOR 230V OPERATION
REMOVE JUMPER ✗✗✗✗ AND ADD
JUMPER BETWEEN TERMINALS 2 & 3
S101
POWER
ON
C101
.1
C102
.1
T101
POWER
CR101
1N1084
CR102
1N1084
CR103
1N1084
CR104
1N1084
C120
.003/2KV
R101
10 Ω 1W
L101
6.5H
C121B
40MFD
C121A
40MFD
R102
22 Ω
2W
V101
OB2
1-5
2-4-7
TP 73
R103
3K
10W
TP 74
C122
.1
NOTE:
S102 SHOWN IN
POSITION 1
S102-A
(FRONT)
S102-B
(FRONT)
S102B
(REAR)
S102C
(FRONT
T103
T104
T105
T106
T107
T108
R107
56K
C127
.005
C128
.005
C130
.005
V103
6DC6
1ST RF AMP
C129
100
ANTENNA
TUNE
C133
.01
C131
.1
C132
.02
R108
120
R109
68K
R110
5K-2W
RF GAIN
S104
J104
ANTENNA
72Ω
TP68
C123
5
R105
820K
TP70
V102
6CB6
MARKER OSC
R106
100K
S103
CALIBRATE
Y101
100KC
C125
.01
C124
7-45
R104
1MEG
C126
220
V102
6CB6
V103
6DC6
V104
6BA6
V105
6EW6
V106
6BA7
V107
6AH6
V108
6AU6
V109
6U8A
V110
6BA6
V111
6AL5
V112
6AZ8
V113
6U8A
V114
6BA6
V115
12AT7
V116
6AB4
V117
12AX7
V118
6AQ5
C103
.005
C104
.001
C105
.02
C106
.02
C107
.01
C109
.02
C110
.001
C111
.001
C112
.001
C113
.001
C114
.02
C115
.001
C116
.001
C117
.1
C119
.2
L106
L108
L109
17uh
L111
9uh
DS101
DS102
DS103
DS104
DS105
TP79
TP34
TP24
TP44
TP60
TP110
TP88
TP95

S101	
POS	FUNCTION
1	ON
2	OFF

S102	
POS	FUNCTION
1	.54 - 1.4
2	1.4 - 3.3
3	3.3 - 5.6
4	5.6 - 9.5
5	9.5 - 17.5
6	17.5 - 32.3

S103	
POS	FUNCTION
1	OFF
2	CALIBRATE