IF IT IS FOUND DESIRABLE TO CHANGE ANY TOLERANCE OR OTHER DETAIL SPECIFIED ON THIS DRAWING NOTIFY THE PURCHASER PROMPTLY.

MAXIMUM ALLOWABLE TOLERANCES HAVE BEEN DETERMINED AND DEVIATIONS WILL BE CAUSE FOR REJECTION. REMOVE ALL BURRS AND SHARP EDGES

CK-300

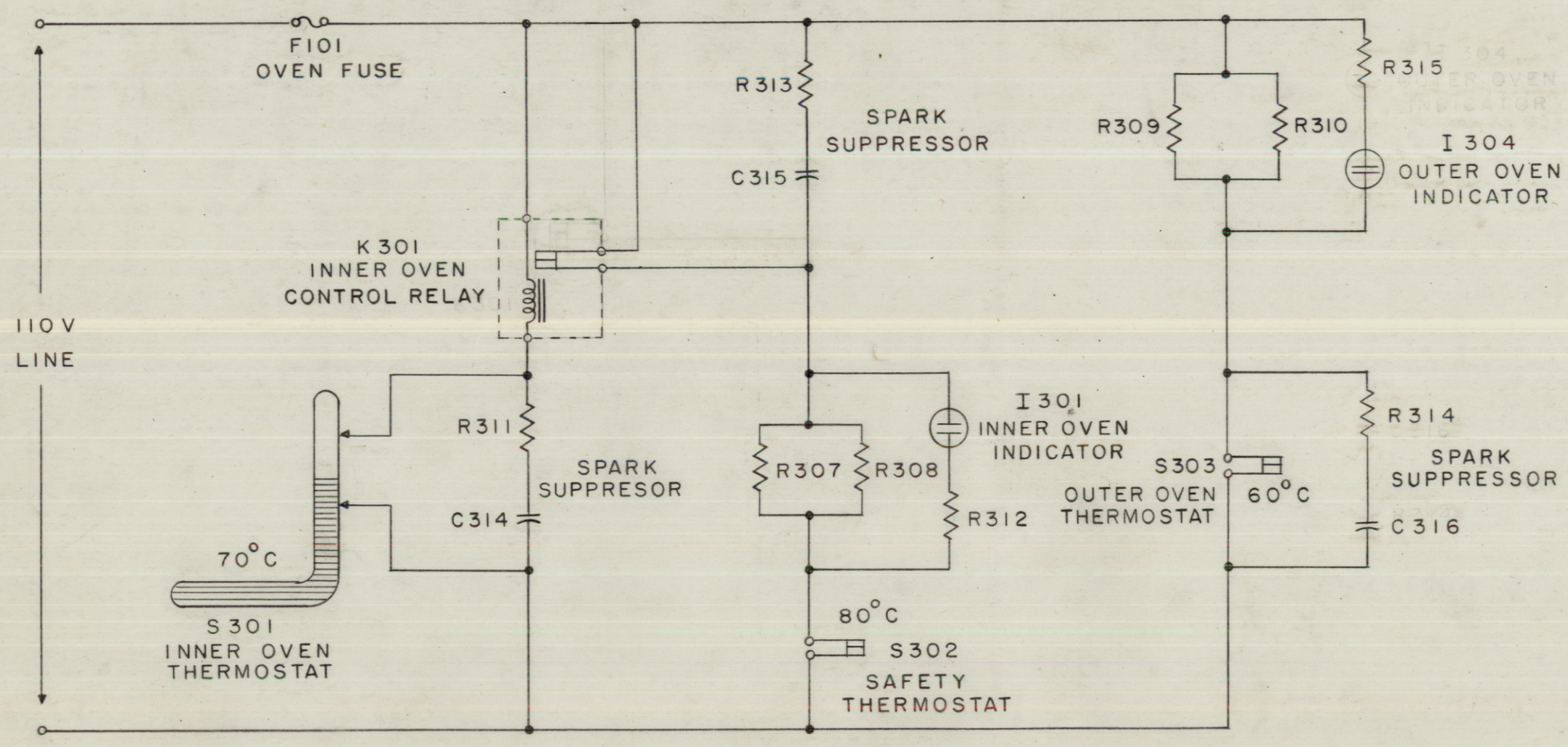

NOTICE TO PERSONS RECEIVING THIS DRAWING

THE TECHNICAL MATERIEL CORPORATION claims proprietary right in the material disclosed hereon. This drawing is issued in confidence for engineering information only and may not be reproduced or used to manufacture anything shown hereon without permission from THE TECHNICAL MATERIEL CORPORATION to the user. This drawing is loaned for mutual assistance and is subject to recall at any time.

Property of:

THE TECHNICAL MATERIEL CORPORATION
MAMARONECK, NEW YORK

ISSUE	ITEM	CHANGED FROM	DATE	CN. NO.	DRAFTS	CHECKER	ENG. APP.

TOLERANCES		SCALE:
ALL OTHERS	DEC. DIM. ± FRAC. DIM. ± ANGULAR DIM. ±	DRILL, PUNCH, COMMERCIAL STOCK SIZES AND MANUFACTURERS TOLERANCES ARE NOT INCLUDED.

REQ. PER UNIT	MODEL	PROJECT NO.	ASS'Y. NO.	DATE
	VOX-2			
	VOX-1			
USED ON				

REQ.	ITEM	PART NO.	DESCRIPTION	SYMBOL

STOCK SIZE

MATERIAL | WEIGHT PER PC.

TYPE & TEMPER

HEAT TREAT. SPEC.

FINISH & SPEC. NO.

THE TECHNICAL MATERIEL CORP.
MAMARONECK. NEW YORK

OVEN WIRING, 110 V CONNECTION

DRAWN	ELEC. DES. APP.	MECH. DES. APP.
CDD 5-5-55		
CHECKED	FINAL APPROVAL	
	A. J. J.	

CK-300

FORM—109

IF IT IS FOUND DESIRABLE TO CHANGE ANY TOLERANCE OR OTHER DETAIL SPECIFIED ON THIS DRAWING NOTIFY THE PURCHASER PROMPTLY.

MAXIMUM ALLOWABLE TOLERANCES HAVE BEEN DETERMINED AND DEVIATIONS WILL BE CAUSE FOR REJECTION.
REMOVE ALL BURRS AND SHARP EDGES

CK-301

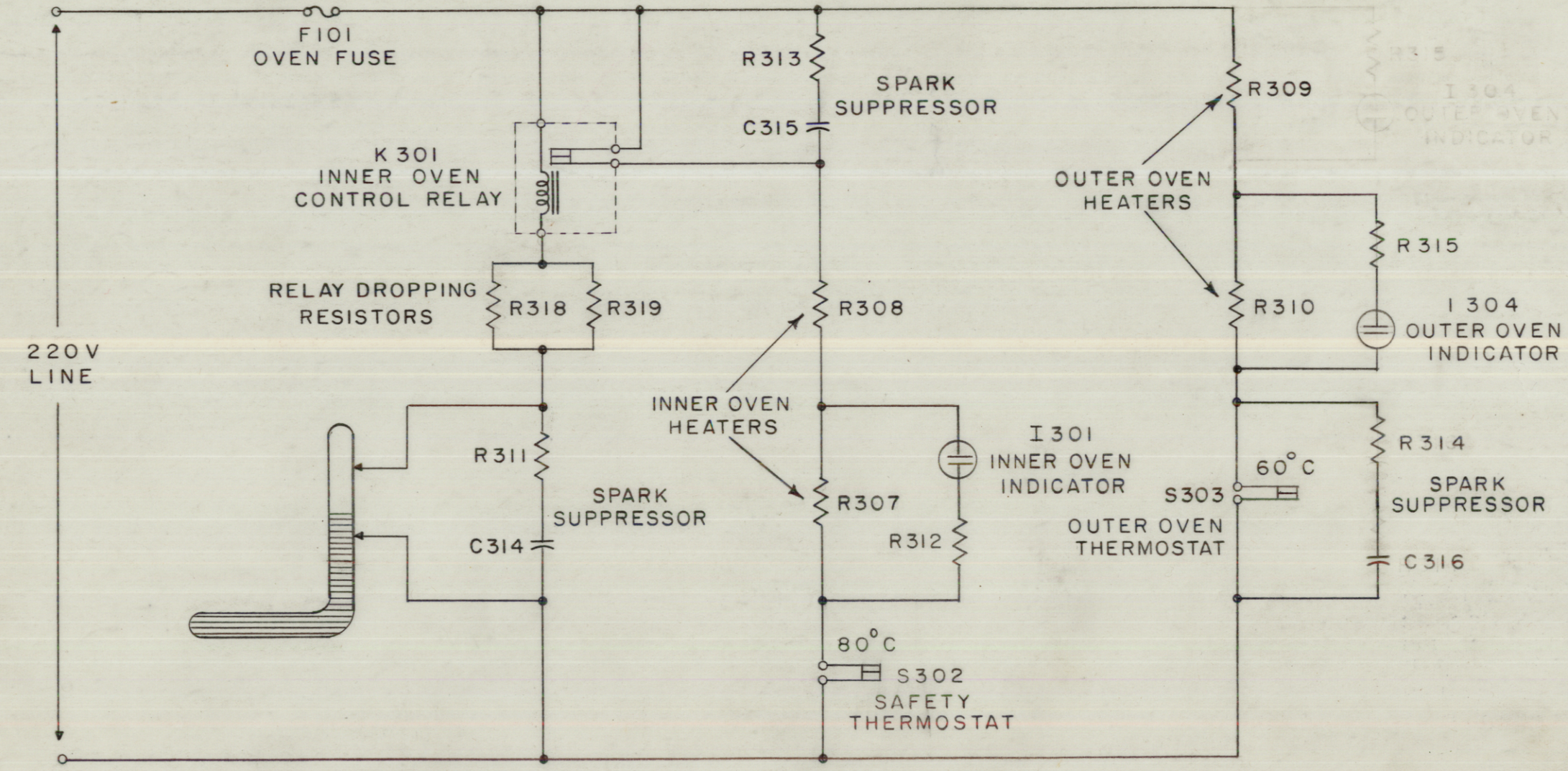

NOTICE TO PERSONS RECEIVING THIS DRAWING

THE TECHNICAL MATERIEL CORPORATION claims proprietary right in the material disclosed hereon. This drawing is issued in confidence for engineering information only and may not be reproduced or used to manufacture anything shown hereon without permission from THE TECHNICAL MATERIEL CORPORATION to the user. This drawing is loaned for mutual assistance and is subject to recall at any time.

Property of:
THE TECHNICAL MATERIEL CORPORATION
MAMARONECK, NEW YORK

ISSUE	ITEM	CHANGED FROM	DATE	CN. NO.	DRAFTS	CHECKER	ENG. APP.

TOLERANCES		SCALE:
ALL OTHERS	DEC. DIM. ± FRAC. DIM. ± ANGULAR DIM. ±	DRILL, PUNCH, COMMERCIAL STOCK SIZES AND MANUFACTURERS TOLERANCES ARE NOT INCLUDED.

REQ. PER UNIT	MODEL	PROJECT NO.	ASS'Y. NO.	DATE
	VOX-2			
	VOX-1			
USED ON				

REQ.	ITEM	PART NO.	DESCRIPTION	SYMBOL

STOCK SIZE

MATERIAL | WEIGHT PER PC.

TYPE & TEMPER

HEAT TREAT. SPEC.

FINISH & SPEC. NO.

THE TECHNICAL MATERIEL CORP.
MAMARONECK. NEW YORK

OVEN WIRING, 220V CONNECTION

DRAWN	ELEC. DES. APP.	MECH. DES. APP.
CDD 5-5-55		VDC
CHECKED	FINAL APPROVAL	
	A. J. J.	

CK-30

FORM—109

IF IT IS FOUND DESIRABLE TO CHANGE ANY TOLERANCE OR OTHER DETAIL SPECIFIED ON THIS DRAWING NOTIFY THE PURCHASER PROMPTLY.

MAXIMUM ALLOWABLE TOLERANCES HAVE BEEN DETERMINED AND DEVIATIONS WILL BE CAUSE FOR REJECTION. REMOVE ALL BURRS AND SHARP EDGES

CK-315 C

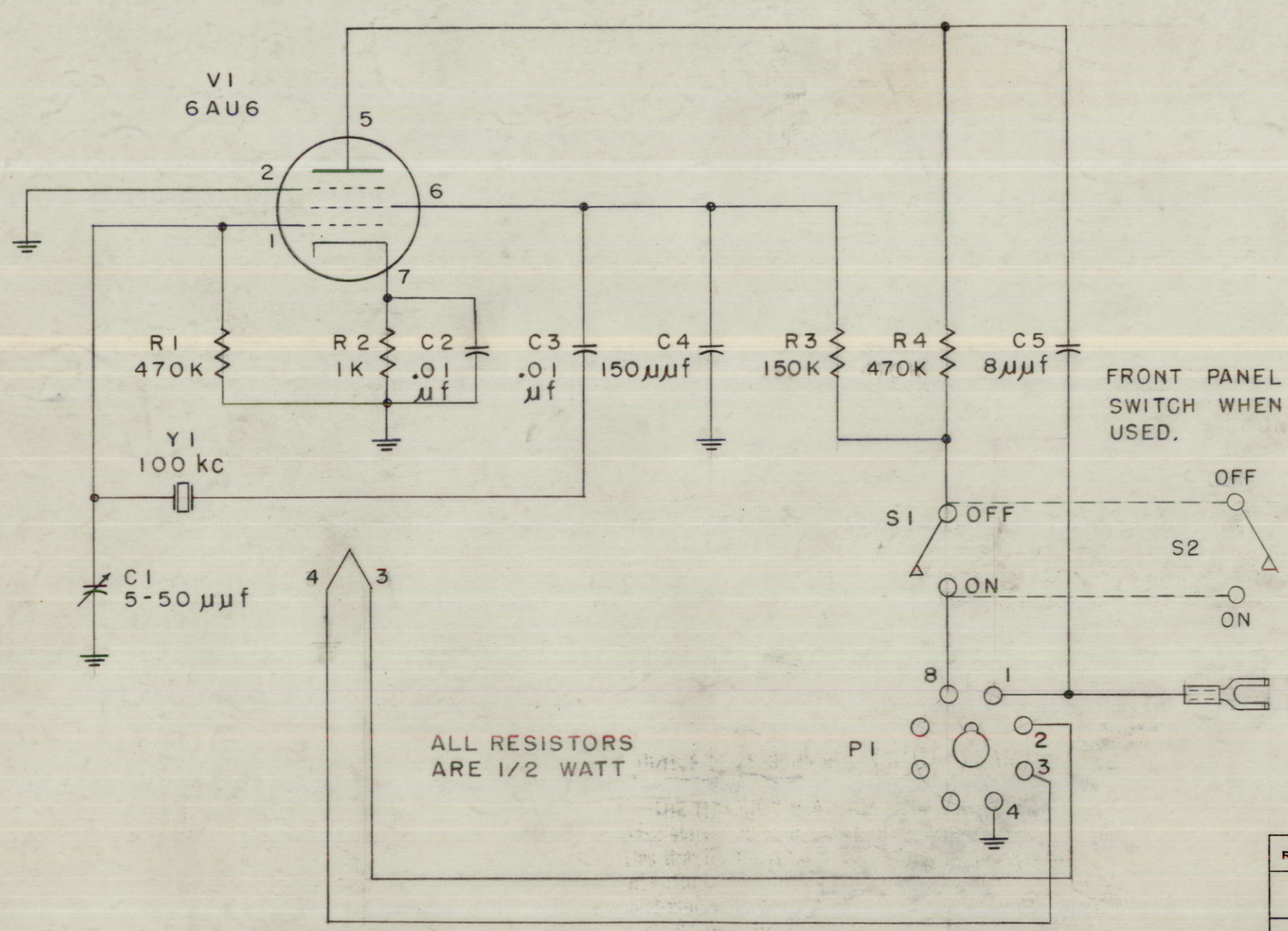

NOTICE TO PERSONS RECEIVING THIS DRAWING

THE TECHNICAL MATERIEL CORPORATION claims proprietary right in the material disclosed hereon. This drawing is issued in confidence for engineering information only and may not be reproduced or used to manufacture anything shown hereon without permission from THE TECHNICAL MATERIEL CORPORATION to the user. This drawing is loaned for mutual assistance and is subject to recall at any time.

Property of:

THE TECHNICAL MATERIEL CORPORATION
MAMARONECK, NEW YORK

ISSUE	ITEM	CHANGED FROM	DATE	CN. NO.	DRAFTS	CHECKER	ENG. APP.
C	1	R4 WAS 100K	12/16/55	3	PB	JMDe	G.T.O.
B	1	SWITCH S2 ADDED	10/31/55	2	PB	JMDe	G.T.O.
A	1	FILAMENTS RELOCATED	10/25/55	1	PB	JMDe	G.T.O.

TOLERANCES

ALL OTHERS: DEC. DIM. ±; FRAC. DIM. ±; ANGULAR DIM. ±

SCALE:

DRILL, PUNCH, COMMERCIAL STOCK SIZES AND MANUFACTURERS TOLERANCES ARE NOT INCLUDED.

REQ. PER UNIT	MODEL	PROJECT NO.	ASS'Y. NO.	DATE
	GPC			10-28-55

USED ON

REQ.	ITEM	PART NO.	DESCRIPTION	SYMBOL

STOCK SIZE

MATERIAL | WEIGHT PER PC.

TYPE & TEMPER

HEAT TREAT. SPEC.

FINISH & SPEC. NO.

THE TECHNICAL MATERIEL CORP.
MAMARONECK. NEW YORK

SCHEMATIC DIAGRAM

CRYSTAL CALIBRATOR GPC

CDD 9-27-55	HH	MLe
DRAWN	ELEC. DES. APP.	MECH. DES. APP.
JMDe	G.T.O.	
CHECKED	FINAL APPROVAL	

CK-315 C

FORM—109

CK-335

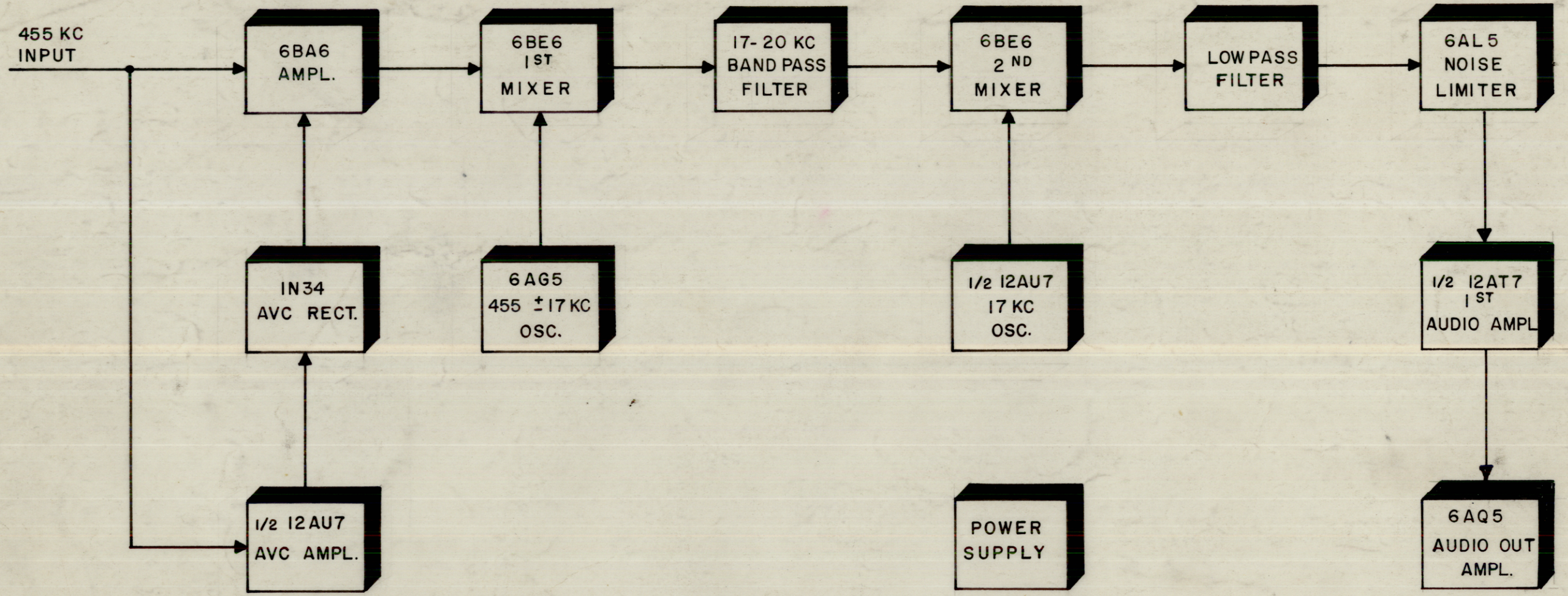

NOTICE TO PERSONS RECEIVING THIS DRAWING

THE TECHNICAL MATERIEL CORPORATION claims proprietary right in the concept disclosed hereon. This drawing is issued in confidence for engineering information only and may not be reproduced or used to manufacture anything shown hereon without permission from THE TECHNICAL MATERIEL CORPORATION to the user. This drawing is loaned for mutual assistance and is subject to recall at any time.

Property of:
THE TECHNICAL MATERIEL CORPORATION
MAMARONECK, NEW YORK

ISSUE	ITEM	CHANGED FROM	DATE	CH. NO.	DRAFTS	CHECKER	ENG. APP.

TOLERANCES

DEC. DIM. ±
FRAC. DIM. ±
ANGULAR DIM. ±

SCALE:

MAXIMUM ALLOWABLE TOLERANCES HAVE BEEN DETERMINED AND ANY DEVIATIONS WILL BE CAUSE FOR REJECTION.
REMOVE ALL BURRS AND SHARP EDGES

REQ. PER UNIT	MODEL	PROJECT NO.	ASS'Y. NO.	DATE

USED ON

REQ.	ITEM	PART NO.	DESCRIPTION	SYMBOL

STOCK SIZE

MATERIAL

TYPE & TEMPER | HEAT TREAT. SPEC. | FINISH & SPEC. NO.

THE TECHNICAL MATERIEL CORP.
MAMARONECK. NEW YORK

BLOCK DIAGRAM

MODEL GSB-I

DRAWN	CHECKED	FINAL APPROVAL

ELEC. DES. APP.	MECH. DES. APP.	CK-335

FORM - 109 - A

CK-343 F

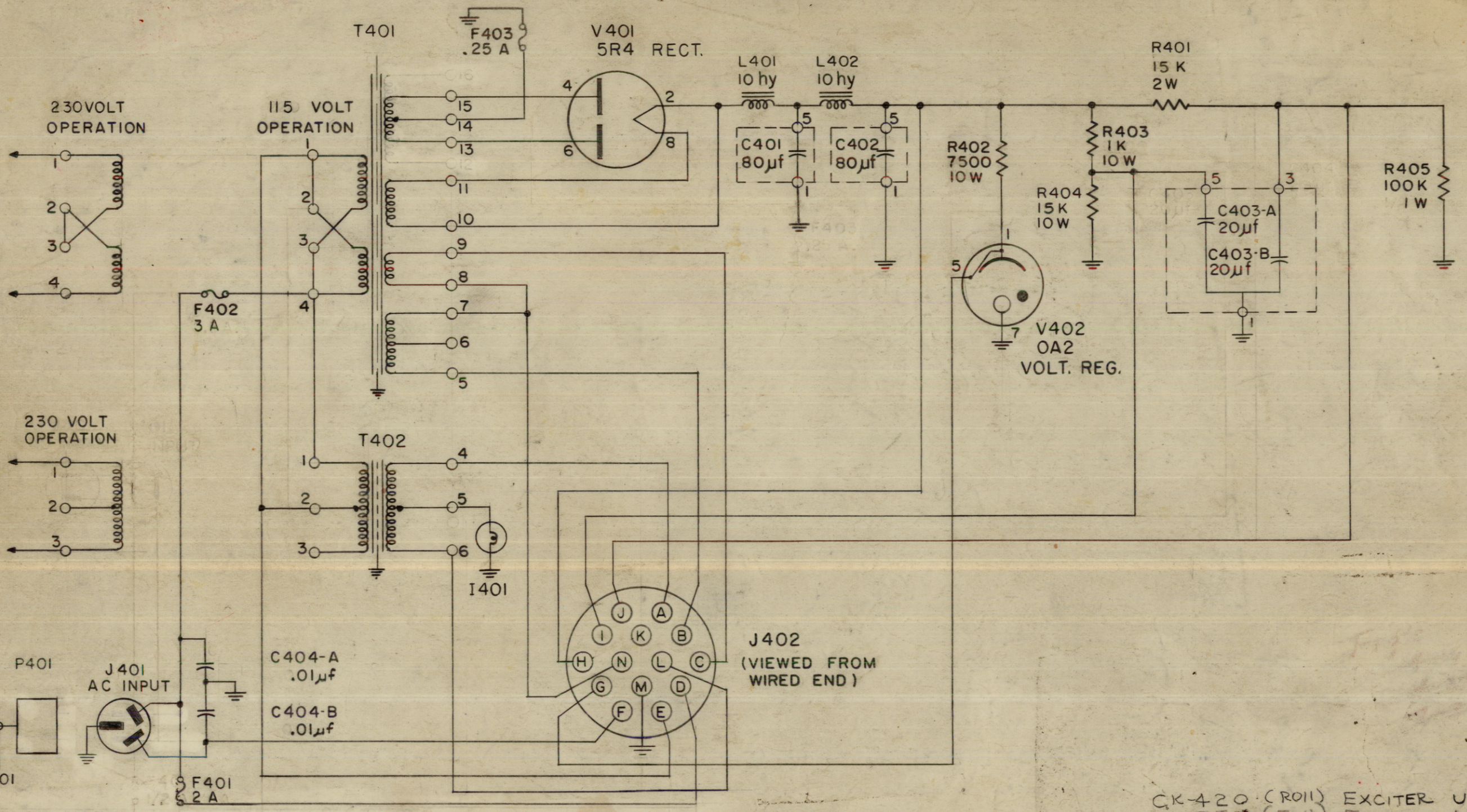

CK-420 (Roll) EXCITER UNIT SBE-3
CK-357 (Roll) EXCITER UNIT SBE-2
Ref. CK-339 (Roll) EXCITER UNIT SBE-1

ISSUE	ITEM	CHANGED FROM	DATE	CH. NO.	DRAFTS	CHECKER	ENG. APP.
F		J401 P401 P402 SYMBOLS REVISED	4-5-67	18086	L.A.K	CK	

TOLERANCES

DEC. DIM. ±
FRAC. DIM. ±
ANGULAR DIM. ±

SCALE:

MAXIMUM ALLOWABLE TOLERANCES HAVE BEEN DETERMINED AND ANY DEVIATIONS WILL BE CAUSE FOR REJECTION.
REMOVE ALL BURRS AND SHARP EDGES

REQ. PER UNIT	MODEL	PROJECT NO.	USED ON	DATE
1	A-1397		SBE-1 & 2	5-13-57

USED ON

REQ.	ITEM	PART NO.	DESCRIPTION	SYMBOL

STOCK SIZE

MATERIAL

THE TECHNICAL MATERIEL CORP.
MAMARONECK. NEW YORK

SCHEMATIC DIAGRAM,
Model A-1397, Power Supply

TYPE & TEMPER	HEAT TREAT. SPEC.	DRAWN	CHECKED	FINAL APPROVAL
		5-13-57 WD	AJJ	

FINISH & SPEC. NO. | ELEC. DES. APP. | MECH. DES. APP. | CK-343 F

FORM - 109 - A

Blow UP 3%

CK-356 D

RESISTANCE POSITION	CENTER ARM (C) CONNECTED TO
1	2 & 3
2	4 & 5
3	6 & 7
4	8 & 9
5	10 & 11
6	C & 1

S204

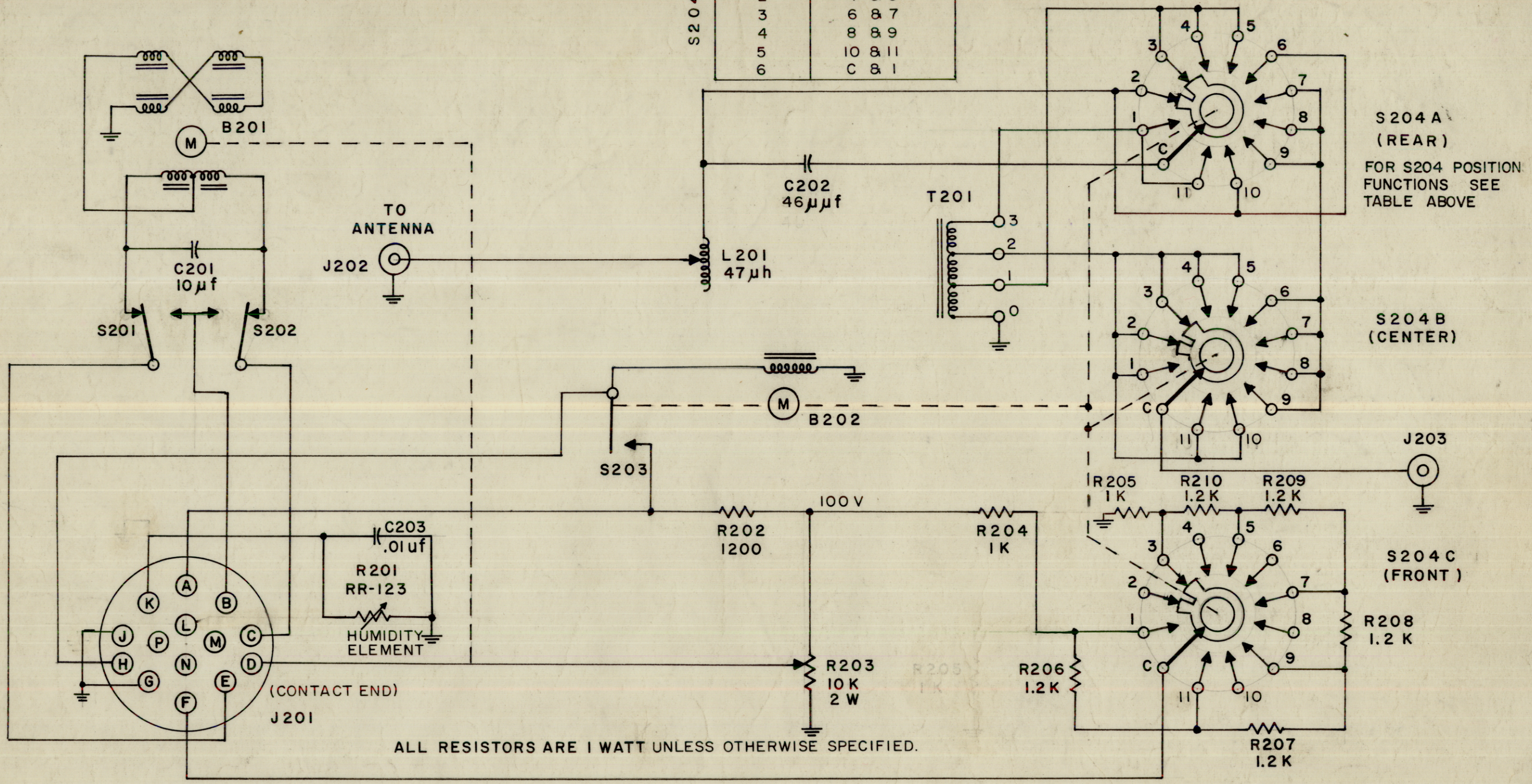

ALL RESISTORS ARE 1 WATT UNLESS OTHERWISE SPECIFIED.

NOTE: APPLICABLE TO ATS-1 ONLY
FOR ATS-2, SEE CK405

SUE	ITEM	CHANGED FROM	DATE	CH. NO.	DRAFTS	CHECKER	ENG. APP.
D	1	NOTE "APPLICABLE..." ADD.	8.17.64	12128	WB	@	MH
C	1	C203 Added (.01 µf) (Chg. #379)	6/9/58	3	WB	@	DER
B	2	J201 PIN "J" Grounded	5/2/58	2	WB		DER
	1	R201 Lead Relocated					
A	1	R205 RELOCATED	4/23/58	1	WB		DER

TOLERANCES
DEC. DIM. ±
FRAC. DIM. ±
ANGULAR DIM. ±

SCALE:

MAXIMUM ALLOWABLE TOLERANCES HAVE BEEN DETERMINED AND ANY DEVIATIONS WILL BE CAUSE FOR REJECTION.
REMOVE ALL BURRS AND SHARP EDGES

FORM-109-A

REQ. PER UNIT	MODEL	PROJECT NO.	ASS'Y. NO.	DATE
1	ATS-50/70 TU			4-9-58

USED ON

REQ.	ITEM	PART NO.	DESCRIPTION	SYMBOL

STOCK SIZE

MATERIAL

TYPE & TEMPER | HEAT TREAT. SPEC. | FINISH & SPEC. NO.

THE TECHNICAL MATERIEL CORP.
MAMARONECK, NEW YORK

SCHEMATIC DIAGRAM R. F. TUNER
MODEL ATS

C.D.D.	DRAWN	CHECKED	FINAL APPROVAL
16 4/9/58	DER		CK-356 D

ELEC. DES. APP. | MECH. DES. APP.

Fig 5-7

CK-362 | A

NOTE: CONNECTORS SHOWN AS VIEWED FROM CONTACT END. PIN A = FORWARD WATTS, PIN D = REFLECTED WATTS.

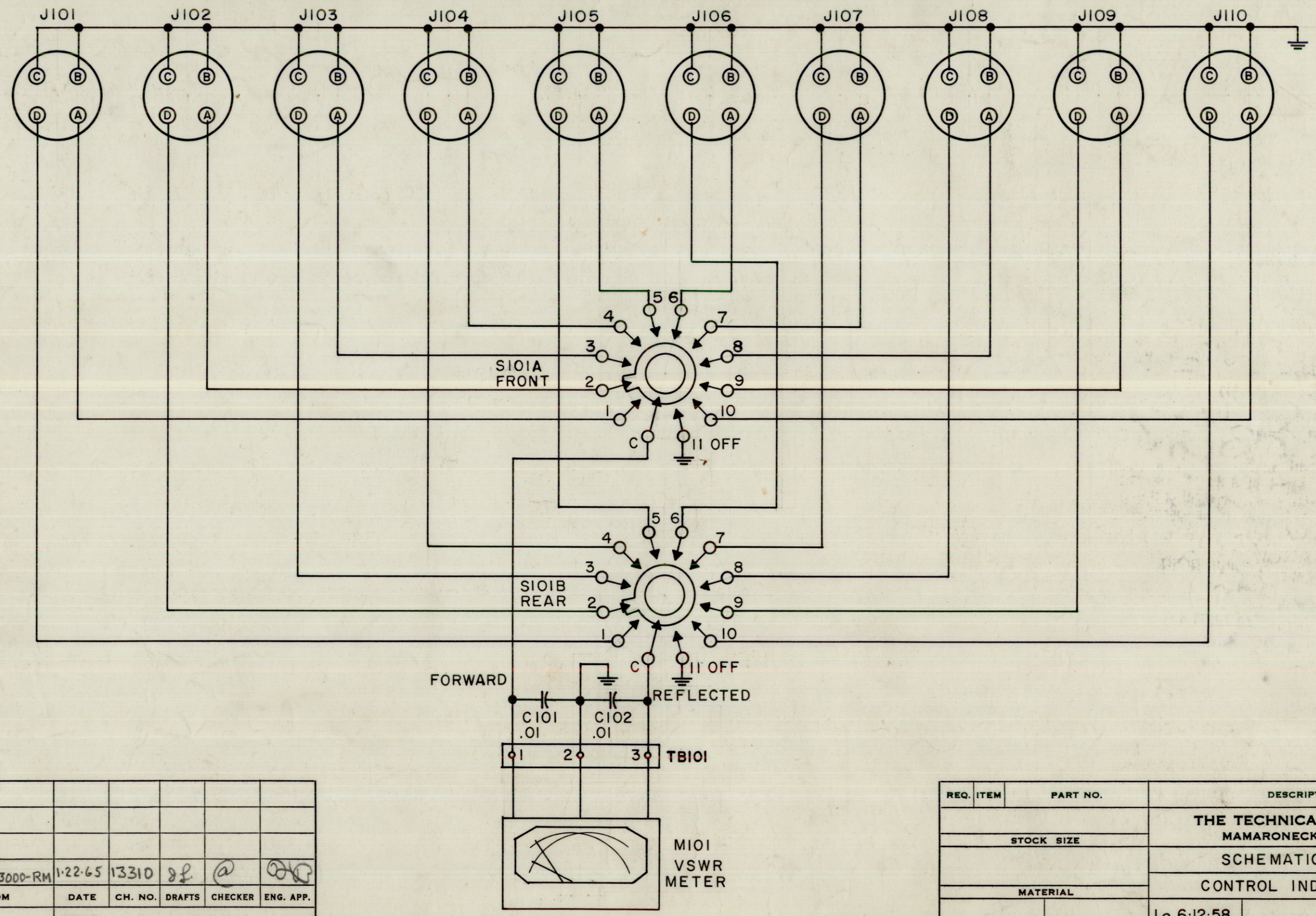

ISSUE	ITEM	CHANGED FROM	DATE	CH. NO.	DRAFTS	CHECKER	ENG. APP.
A	2 1	TB101 WAS E101; MODEL WAS SWR-3000-RM	1-22-65	13310	DL	@	DHG

TOLERANCES

DEC. DIM. ±
FRAC. DIM. ±
ANGULAR DIM. ±

SCALE:

MAXIMUM ALLOWABLE TOLERANCES HAVE BEEN DETERMINED AND ANY DEVIATIONS WILL BE CAUSE FOR REJECTION.
REMOVE ALL BURRS AND SHARP EDGES

REQ. PER UNIT	MODEL	PROJECT NO.	ASS'Y. NO.	DATE
1	SWR-3K-RM			6-12-58

USED ON

REQ.	ITEM	PART NO.	DESCRIPTION	SYMBOL

THE TECHNICAL MATERIEL CORP.
MAMARONECK. NEW YORK

SCHEMATIC DIAGRAM,

CONTROL INDICATOR, SWR-3K-RM

STOCK SIZE | MATERIAL | TYPE & TEMPER | HEAT TREAT. SPEC. | FINISH & SPEC. NO.

DRAWN	CHECKED	FINAL APPROVAL
LG 6-12-58		

ELEC. DES. APP. | MECH. DES. APP.

CK-362 | A

FORM-109-A

CK - 368

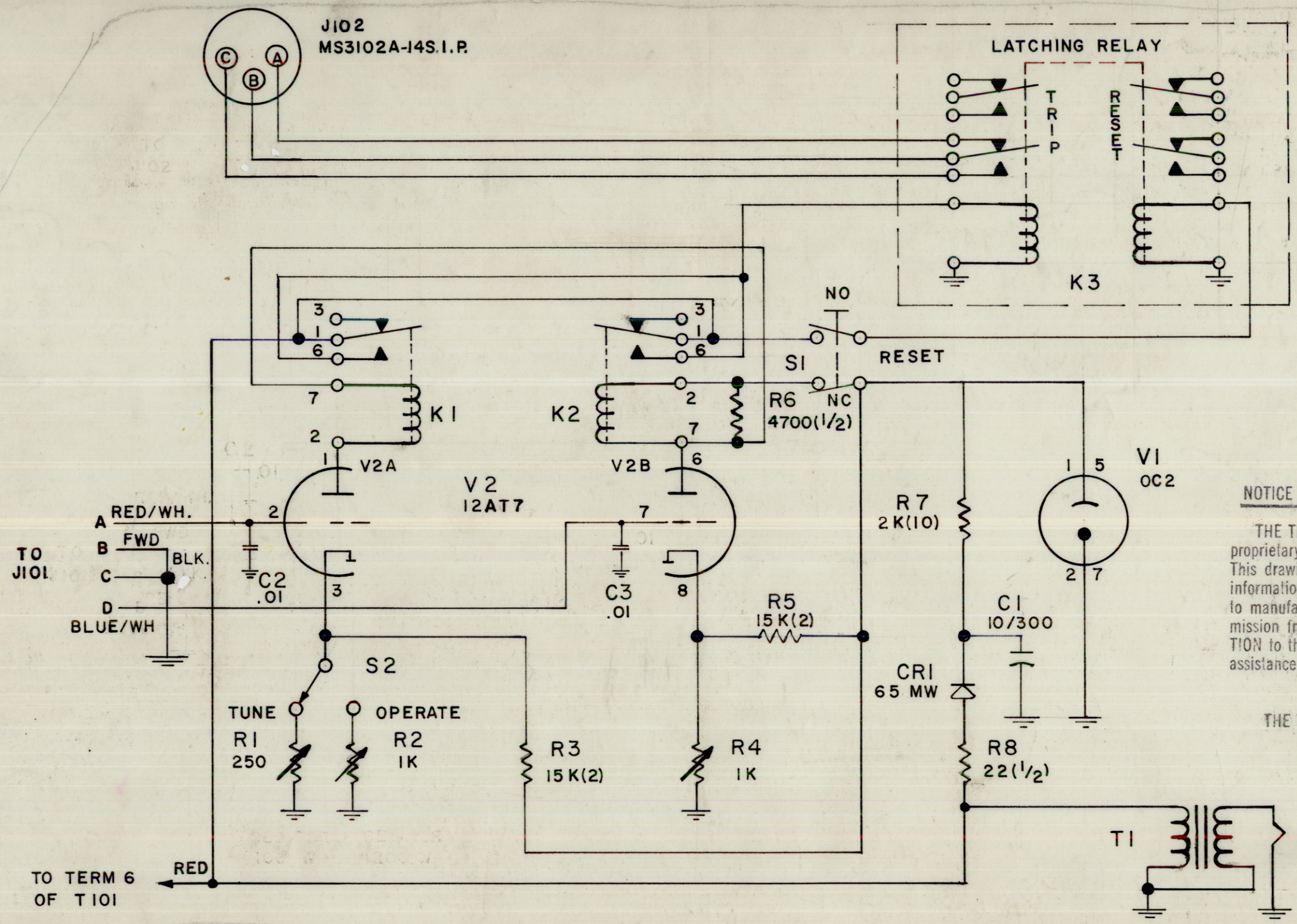

NOTICE TO PERSONS RECEIVING THIS DRAWING

THE TECHNICAL MATERIEL CORPORATION claims proprietary right in the material disclosed hereon. This drawing is issued in confidence for engineering information only and may not be reproduced or used to manufacture anything shown hereon without permission from THE TECHNICAL MATERIEL CORPORATION to the user. This drawing is loaned for mutual assistance and is subject to recall at any time.

Property of:
THE TECHNICAL MATERIEL CORPORATION
MAMARONECK, NEW YORK

ISSUE	ITEM	CHANGED FROM	DATE	CH. NO.	DRAFTS	CHECKER	ENG. APP.
B	1	C2 & C3 CAPACITORS ADDED	10-20-58	491	J.C.B		
A	1	J102 MS3102A-14 S.I.P ADDED, COLOR CODE ADDED	10-15-58	476	J.C.B.		

TOLERANCES
DEC. DIM. ±
FRAC. DIM. ±
ANGULAR DIM. ±

SCALE:
MAXIMUM ALLOWABLE TOLERANCES HAVE BEEN DETERMINED AND ANY DEVIATIONS WILL BE CAUSE FOR REJECTION.
REMOVE ALL BURRS AND SHARP EDGES

REQ. PER UNIT	MODEL	PROJECT NO.	ASS'Y. NO.	DATE
	S-394	ATS-MCU, MOD. KIT		

USED ON

REQ.	ITEM	PART NO.	DESCRIPTION	SYMBOL

STOCK SIZE

MATERIAL

TYPE & TEMPER | HEAT TREAT. SPEC.

FINISH & SPEC. NO.

THE TECHNICAL MATERIEL CORP.
MAMARONECK. NEW YORK

SCHEMATIC DIAGRAM
PROTECTIVE CIRCUIT S-394

DRAWN	CHECKED	FINAL APPROVAL
esc		

ELEC. DES. APP. | MECH. DES. APP.

CK- 368 B

FORM-109-A

FIGURE 6

IF IT IS FOUND DESIRABLE TO CHANGE ANY TOLERANCE OR OTHER DETAIL SPECIFIED ON THIS DRAWING NOTIFY THE PURCHASER PROMPTLY.

MAXIMUM ALLOWABLE TOLERANCES HAVE BEEN DETERMINED AND DEVIATIONS WILL BE CAUSE FOR REJECTION.
REMOVE ALL BURRS AND SHARP EDGES

CK-379

NOTICE TO PERSONS RECEIVING THIS DRAWING

THE TECHNICAL MATERIEL CORPORATION claims proprietary right in the material disclosed hereon. This drawing is issued in confidence for engineering information only and may not be reproduced or used to manufacture anything shown hereon without permission from THE TECHNICAL MATERIEL CORPORATION to the user. This drawing is loaned for mutual assistance and is subject to recall at any time.

Property of:

THE TECHNICAL MATERIEL CORPORATION
MAMARONECK, NEW YORK

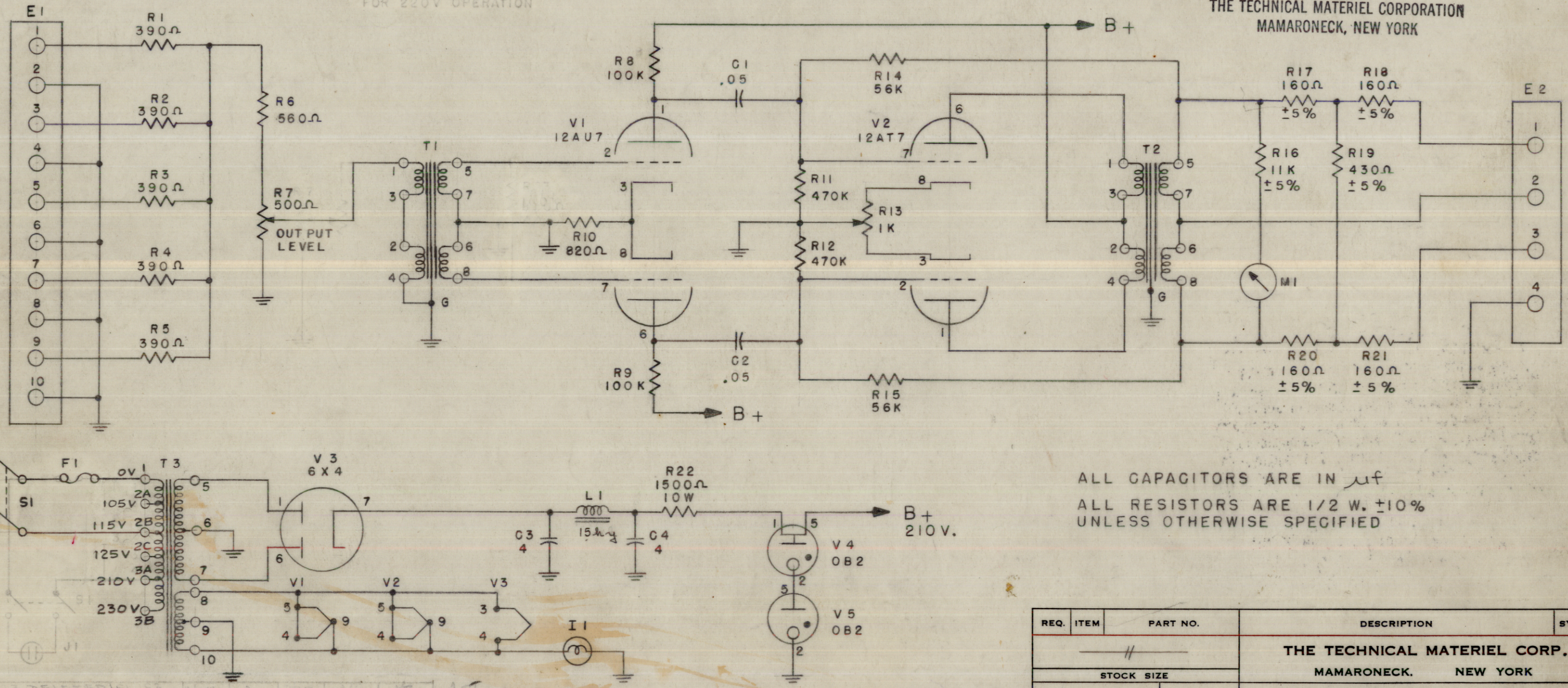

ALL CAPACITORS ARE IN μf

ALL RESISTORS ARE 1/2 W. ±10% UNLESS OTHERWISE SPECIFIED

ISSUE	ITEM	CHANGED FROM	DATE	CN. NO.	DRAFTS	CHECKER	ENG. APP.
C	1	R-C3 DELETED, SW. S-.01					
B	2	T3 REWIRED C1-C2 WERE .05	10/25/54	2	MDC	CDD	K2
	3	R7 CHANGED					
A	2	R8 WAS 400	9-17-54	1	CDD	MDC	K2
	1	R23 ADDED					

RSM-1

TOLERANCES

ALL OTHERS: DEC. DIM. ±, FRAC. DIM. ±, ANGULAR DIM. ±

SCALE:

DRILL, PUNCH, COMMERCIAL STOCK SIZES AND MANUFACTURERS TOLERANCES ARE NOT INCLUDED.

MODEL	PROJECT NO.	ASS'Y. NO.	DATE
RSM-3	1.70	A-542	10-16-58

USED ON

REQ.	ITEM	PART NO.	DESCRIPTION	SYMBOL
			THE TECHNICAL MATERIEL CORP. MAMARONECK. NEW YORK	
		STOCK SIZE	SCHEMATIC DIAGRAM	
		MATERIAL / WEIGHT PER PC.	RSM-3	
		TYPE & TEMPER	10/16/58 DRAWN: P.Z.K	ELEC. DES. APP. / MECH. DES. APP.
		HEAT TREAT. SPEC.	CHECKED	FINAL APPROVAL
		FINISH & SPEC. NO.	SUPERCEDES	CK-379

FORM — 109

IF IT IS FOUND DESIRABLE TO CHANGE ANY TOLERANCE OR OTHER DETAIL SPECIFIED ON THIS DRAWING NOTIFY THE PURCHASER PROMPTLY.

MAXIMUM ALLOWABLE TOLERANCES HAVE BEEN DETERMINED AND DEVIATIONS WILL BE CAUSE FOR REJECTION. REMOVE ALL BURRS AND SHARP EDGES

CK-380

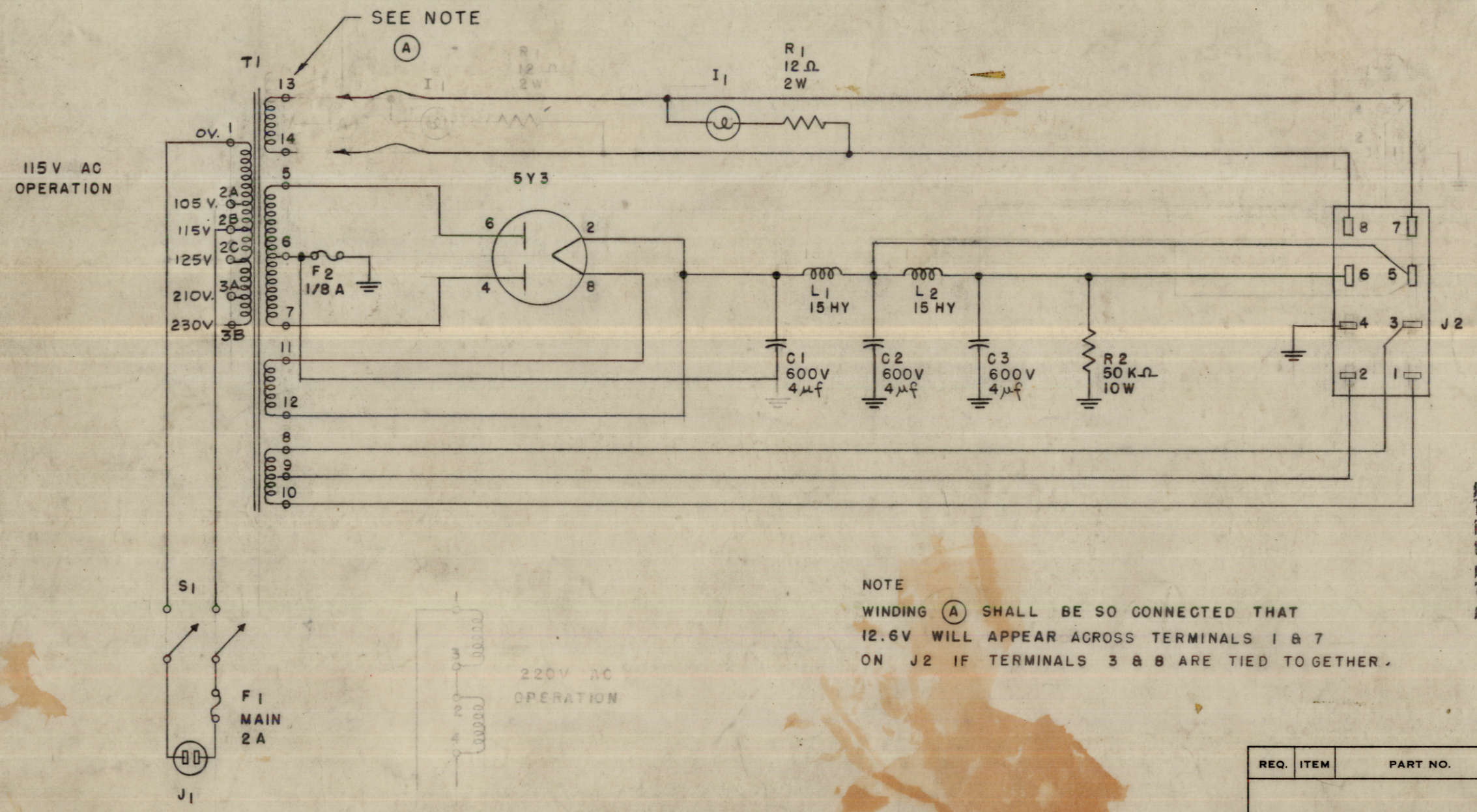

NOTE
WINDING (A) SHALL BE SO CONNECTED THAT
12.6V WILL APPEAR ACROSS TERMINALS 1 & 7
ON J2 IF TERMINALS 3 & 8 ARE TIED TOGETHER.

NOTICE TO PERSONS RECEIVING THIS DRAWING

THE TECHNICAL MATERIEL CORPORATION claims proprietary right in the material disclosed hereon. This drawing is issued in confidence for engineering information only and may not be reproduced or used to manufacture anything shown hereon without permission from THE TECHNICAL MATERIEL CORPORATION to the user. This drawing is loaned for mutual assistance and is subject to recall at any time.

Property of:
THE TECHNICAL MATERIEL CORPORATION
MAMARONECK, NEW YORK

ISSUE	ITEM	CHANGED FROM	DATE	CN. NO.	DRAFTS	CHECKER	ENG. APP.
C		C1 GROUND REROUTED	4/13/59	3	PA	JAG	A.J.T.
B		NOTE ADDED	3/17/59	1	JAG	JAG	A.J.T.
A		J2 + SW1 CHANGED TO DELETED	3/16/59	1	CDM	JAG	A.J.T.

TOLERANCES — SCALE: —H—

ALL OTHERS: DEC. DIM. ±; FRAC. DIM. ±; ANGULAR DIM. ±

DRILL, PUNCH, COMMERCIAL STOCK SIZES AND MANUFACTURERS TOLERANCES ARE NOT INCLUDED.

MODEL	PROJECT NO.	ASS'Y. NO.	DATE
RSP-3	170	A-[illegible]	10-16-58

USED ON

REQ.	ITEM	PART NO.	DESCRIPTION	SYMBOL

STOCK SIZE | MATERIAL | WEIGHT PER PC. | TYPE & TEMPER | HEAT TREAT. SPEC. | FINISH & SPEC. NO.

THE TECHNICAL MATERIEL CORP.
MAMARONECK. NEW YORK

SCHEMATIC DIAGRAM
REMOTE SYSTEM POWER SUPPLY

DRAWN	ELEC. DES. APP.	MECH. DES. APP.
6 10/16/58 P.R.K.		

CHECKED | FINAL APPROVAL

SUPERSEDES RSP-1

CK-380

FORM — 109