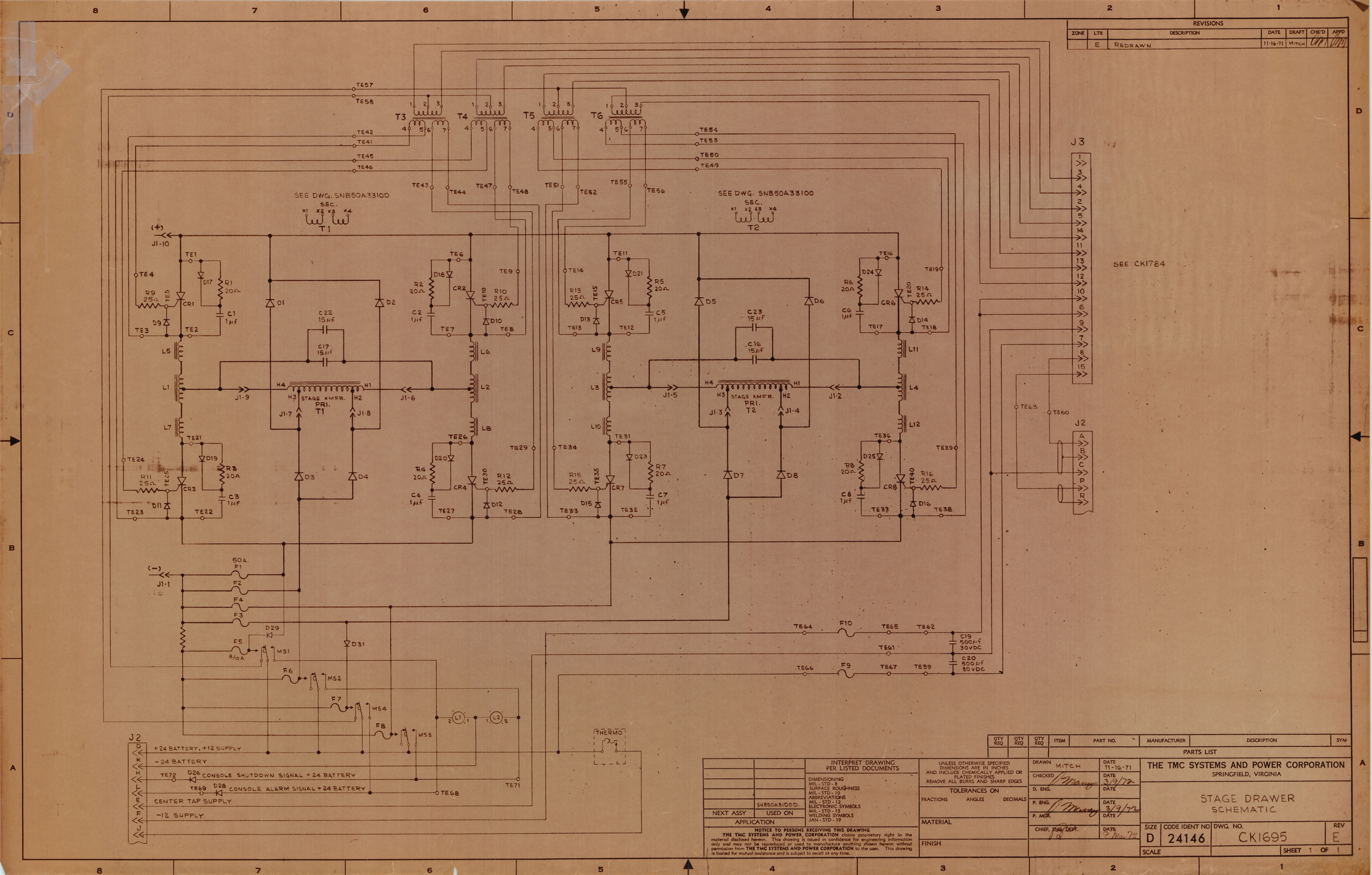

REVISIONS
ZONE | LTR | DESCRIPTION | DATE | DRAFT | CHK'D | APPD
E | REDRAWN | 11-16-71 | MITCH
SEE DWG. SNB50A33100 SEC.
SEE DWG. SNB50A33100 SEC.
SEE CK1784
STAGE XMFR. PRI. T1
STAGE XMFR. PRI. T2
J3
J2
J1-10
J1-1
J1-9
J1-6
J1-5
J1-2
J1-7
J1-8
J1-3
J1-4
50A.
THERMO
+24 BATTERY, +12 SUPPLY
-24 BATTERY
CONSOLE SHUTDOWN SIGNAL +24 BATTERY
CONSOLE ALARM SIGNAL +24 BATTERY
CENTER TAP SUPPLY
-12 SUPPLY
C19 500µf 30VDC
C20 500µf 30VDC
PARTS LIST
QTY REQ | QTY REQ | QTY REQ | ITEM | PART NO. | MANUFACTURER | DESCRIPTION | SYM
INTERPRET DRAWING PER LISTED DOCUMENTS
DIMENSIONING MIL-STD-8
SURFACE ROUGHNESS MIL-STD-10
ABBREVIATIONS MIL-STD-12
ELECTRONIC SYMBOLS MIL-STD-15
WELDING SYMBOLS JAN-STD-19
NEXT ASSY | USED ON
SNB50A31000
APPLICATION
UNLESS OTHERWISE SPECIFIED DIMENSIONS ARE IN INCHES AND INCLUDE CHEMICALLY APPLIED OR PLATED FINISHES REMOVE ALL BURRS AND SHARP EDGES
TOLERANCES ON
FRACTIONS ANGLES DECIMALS
MATERIAL
FINISH
DRAWN MITCH DATE 11-16-71
CHECKED DATE 3/9/72
D. ENG. DATE
P. ENG. DATE 3/9/72
P. MGR. DATE
CHIEF, ENG. DEPT. DATE 9 Mar 72
THE TMC SYSTEMS AND POWER CORPORATION
SPRINGFIELD, VIRGINIA
STAGE DRAWER SCHEMATIC
SIZE D | CODE IDENT NO 24146 | DWG. NO. CK1695 | REV E
SCALE | SHEET 1 OF 1
NOTICE TO PERSONS RECEIVING THIS DRAWING
THE TMC SYSTEMS AND POWER CORPORATION claims proprietary right in the material disclosed hereon. This drawing is issued in confidence for engineering information only and may not be reproduced or used to manufacture anything shown hereon without permission from THE TMC SYSTEMS AND POWER CORPORATION to the user. This drawing is loaned for mutual assistance and is subject to recall at any time.