ISSUE	ITEM	CHANGED FROM	DATE	CN. NO.	DRAFTS	CHECKER	ENG. APP.	REQ.	ITEM	PART NO.	DESCRIPTION	SYMBOL
X1		IN756 WAS IN753	4/10 67	EDC 70	AP							

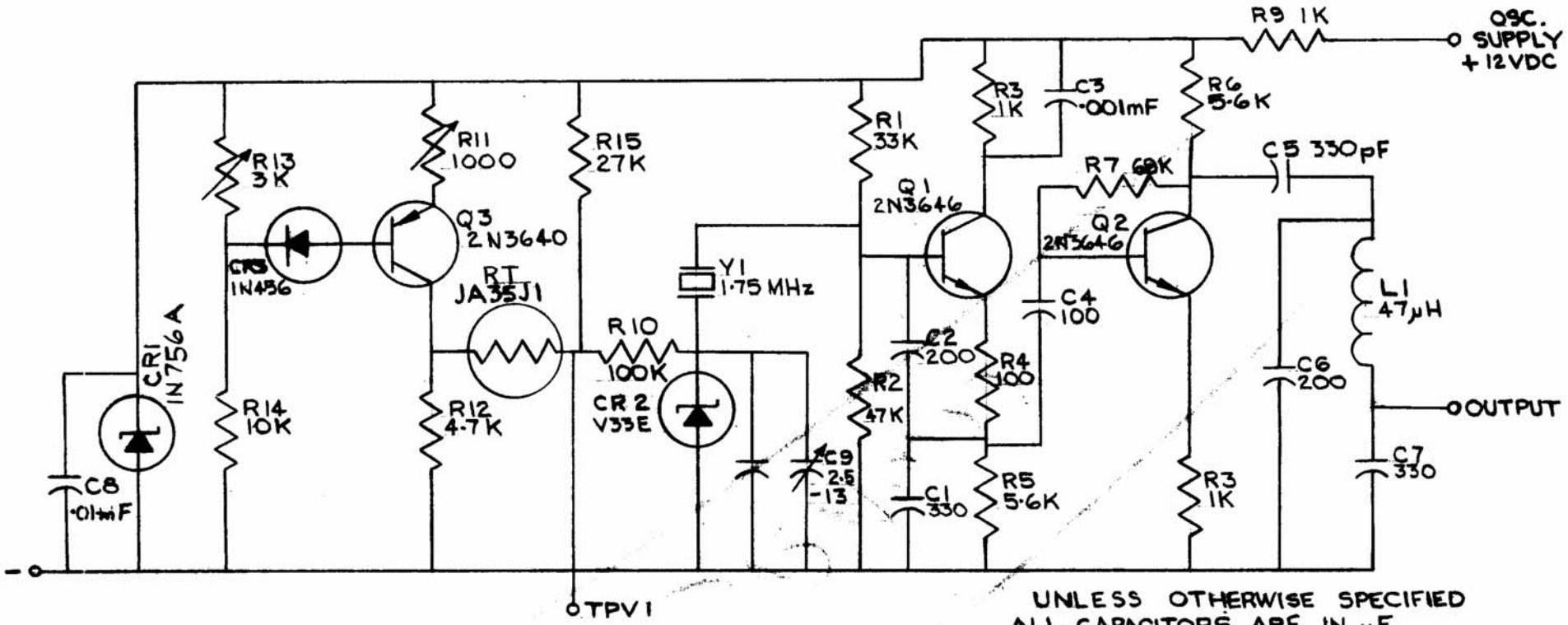

UNLESS OTHERWISE SPECIFIED
ALL CAPACITORS ARE IN μF
ALL COILS ARE IN μH
ALL RESISTORS ARE 1/4 WATT

MODEL	PROJECT NO.	ASS'Y. NO.	DATE
NF 10002	068/67	A 10638	JULY 28/67

USED ON

MAXIMUM ALLOWABLE TOLERANCES HAVE BEEN DETERMINED AND DEVIATIONS WILL BE CAUSE FOR REJECTION. REMOVE ALL BURRS AND SHARP EDGES

IF IT IS FOUND DESIRABLE TO CHANGE ANY TOLERANCE OR OTHER DETAIL SPECIFIED ON THIS DRAWING NOTIFY THE PURCHASER PROMPTLY.

TOLERANCES

ALL OTHERS: DEC. DIM. ±; FRAC. DIM. ±; ANGULAR DIM. ±

SCALE

DIMENSIONS IN INCHES UNLESS OTHERWISE SPECIFIED

DRILL, PUNCH, COMMERCIAL STOCK SIZES AND MANUFACTURERS TOLERANCES ARE NOT INCLUDED.

STOCK SIZE

MATERIAL | WEIGHT PER PC.

TYPE & TEMPER

HEAT TREAT. SPEC.

FINISH & SPEC. NO.

TMC (Canada) LIMITED
OTTAWA ONTARIO

SCHEMATIC, TCXO

DRAWN	ELEC. DES. APP.	MECH. DES. APP.
GAM		

CHECKED | FINAL APPROVAL

CK10536 X1

FORM—127